The product using material and processing must conform to the "WL-PZ-001"HSF technical standard control requirements

RoHS

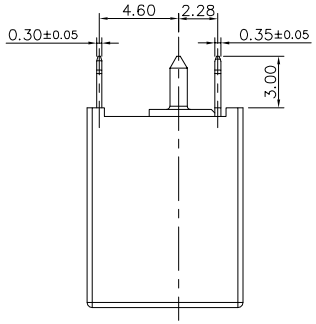

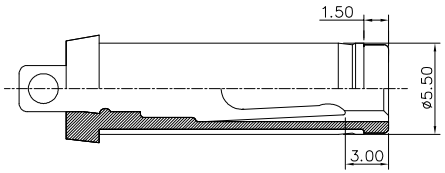

RECOMMENDED PLUG
ø5.5 PLUG

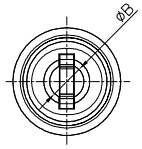

PROPOSAL ONLY

NOTE:
1.MATERIAL SPECIFICATION:
1-1.HOUSING: THERMOPLASTIC
1-2.COVER: THERMOPLASTIC,BLACK
1-3.CENTER PIN: BRASS, NI PLATING
1-4.CENTER PIN TERMINAL: BRASS,TIN PLATING
1-5.TIP SPRING: PHOSPHOR BRONZE,TIN PLATING
1-6.SHUNT TERMINAL: BRASS,TIN PLATING
2.MECHANICAL PERFORMANCE:
2-1.INSERTION FORCE: 3N-30N
2-2.REMOVAL FORCE: 3N-30N
2-3.DURABILITY: 5000 CYCLES MIN.
3.ELECTRICAL PERFORMANCE:
3-1. CURRENT RATING:5A
VOLTAGE RATING:20V
3-2. CONTACT RESISTANCE: 30m Ohm Max.
3-3.INSULATION RESISTANCE: 100MΩ MIN
3-4.WITHSTANDING VOLTAGE: 500V AC r.m.s.
4.ENVIRONMENTAL PERFORMANCE:
OPERATING TEMPERATURE: -40°C~+85°C.
5.PACKAGE SPEC: PEBAG
6.P/N:

WL DJ F 0-03 1 7 A X 075

CENTER PIN DIAMETER:
A-ø1.65
B-ø2.0
C-ø2.5

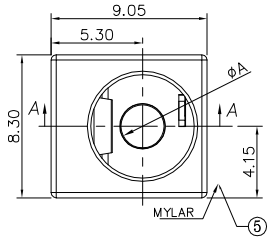

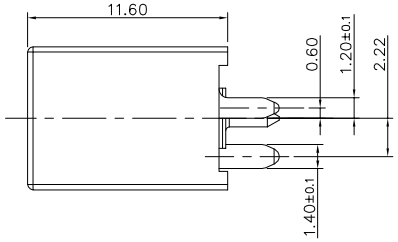

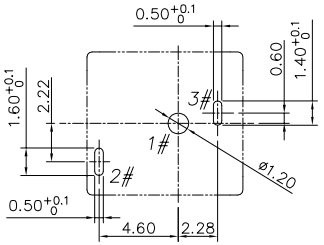

PCB HOLES(TOP VIEW) t=1.6mm
NOTE: GENERAL TOLERANCE: ±0.05mm

ø2.5+0 -0.10	ø2.55+0.1 0
ø2.0+0 -0.10	ø2.05+0.1 0
ø1.65+0 -0.10	ø1.7+0.1 0
CENIER PIN DIA. øA	PLUG DIA. øB

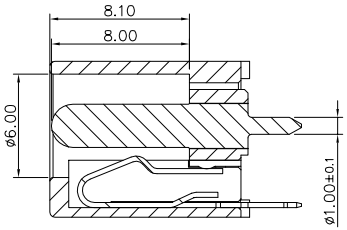

SECTION A-A

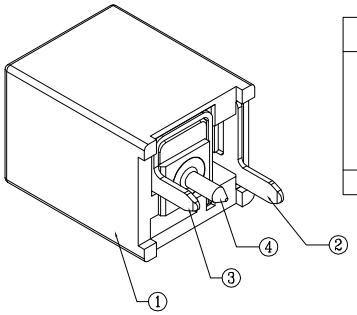

DC01840-A

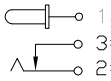

CIRCUIT DIAGRAM

NO.	DESCRIPTION	QTY	MATERIAL	PLATING
④	CONTACT PIN	1	COPPER ALLOY	Ni plating
③	SHUNT CONTACT	1	COPPER ALLOY	Tin Plating
②	TIP SPRING	1	COPPER ALLOY	Tin Plating
①	HOUSING	1	High-Temp THERMOPLASTIC, Black	

REV.	REVISION RECORD	DATE
A0	NEW RELEASE	21.11.17

UNIT: mm
SIZE: A4

GENERAL TOLERANCES	
LINEAR	ANGLES
0.0±0.35	X°REF±6°
0.00±0.25	X°±3°
0.000±0.10	X°X' ±2°

SCALE: 1:1	NAME	DATE
APPROVED	Wang_jr	21.11.17
DESIGNER	Han_Gao	21.11.17
DRAWN	Zijun_Huang	21.11.17

PART.NO: WLDJF0-0317AX075

DWG.NO: ENDE05

TITLE: DC POWER JACK

万连科技
WanLian Teconology Co., Ltd

REV: A0

SHEET: 1/1