The product using material and processing must conform to the "WL-PZ-001"HSF technical standard control requirements

RoHS

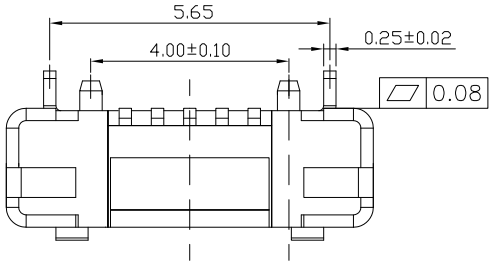

PIN NUMBER	SIGNAL NAME
1	VBUS
2	D-
3	D+
4	ID
5	GND

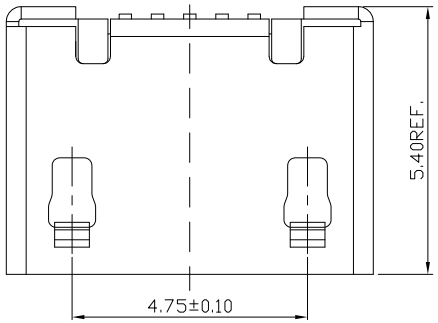

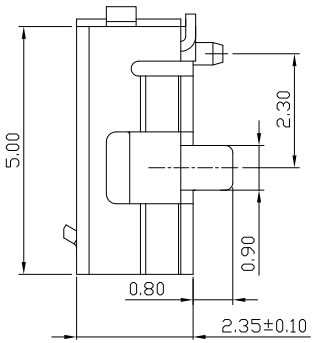

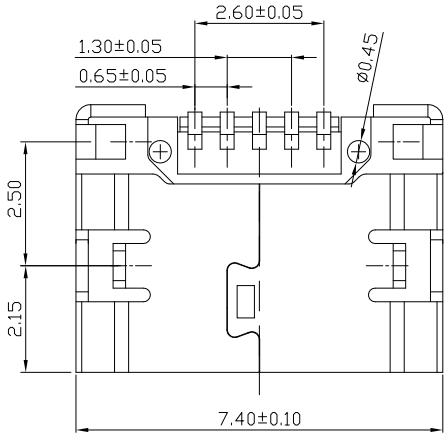

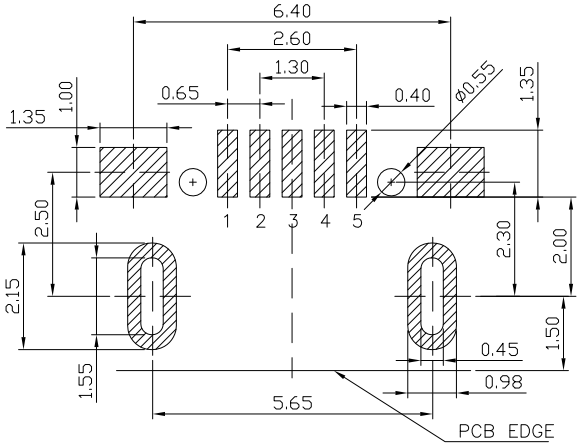

RECOMMANDED PCB LAYOUT

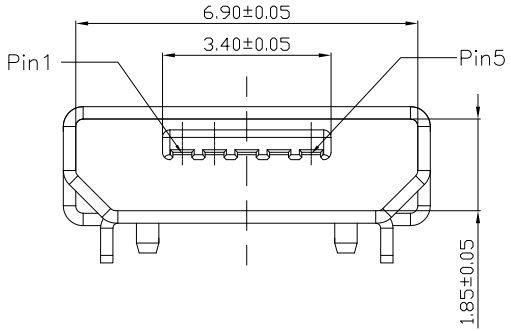

NOTE:
1.MECHANICAL PERFORMANCE:
1-1.INSERTION FORCE: 3.57kgf MAX
1-2.REMOVAL FORCE: 0.8kgf MIN
1-3.DURABILITY: 10000 CYCLES.
2.ELECTRICAL PERFORMANCE:
2-1.CURRENT RATING:1.5A
2-2.VOLTAGE RATING:5V MAX
2-3.CONTACT RESISTANCE: 30m Ohm MAX.
2-4.INSULATION RESISTANCE: 100MΩ MIN
2-5.DIELECTRIC WITHSTANDING VOLTAGE: 100V AC MIN
3.ENVIRONMENTAL PERFORMANCE:
OPERATING TEMPERATURE: -30°C~+80°C.
PACKAGE SPEC: REEL 1500PCS

NO.	DESCRIPTION	QTY	MATERIAL	FINISH
3	SHELL	1PCS	STAINLESS STEEL	Ni Plating
2	CONTACTS	5PCS	COPPER ALLOY	Au Gold Flash
1	HOUSING	1PCS	LCP UL94V-0	BLACK

REV.	REVISION RECORD	DATE
A0	NEW RELEASE	16.05.19
A1	ADD illustrate	23.12.08

UNIT: mm
SIZE: A4

GENERAL TOLERANCES	
LINEAR	ANGLES
0.0±0.35	X°REF±6°
0.00±0.25	X°±3°
0.000±0.10	X°X' ±2°

SCALE: 1:1	NAME	DATE
APPROVED	Wang_jr	16.05.19
DESIGNER	Ding_bo	16.05.19
DRAWN	Ou_jian	16.05.19

PART.NO: WLM2F9-0521A9065

DWG.NO: ENDE05

TITLE: MICRO 5P/F B 前插后贴5.65（0.8*0.9）有柱平口

万连科技 WanLian Teconology Co., Ltd

REV: A1

SHEET: 1/1