The product using material and processing must conform to the "WI-PZ-001"HSF technical standard control requirements

RoHS

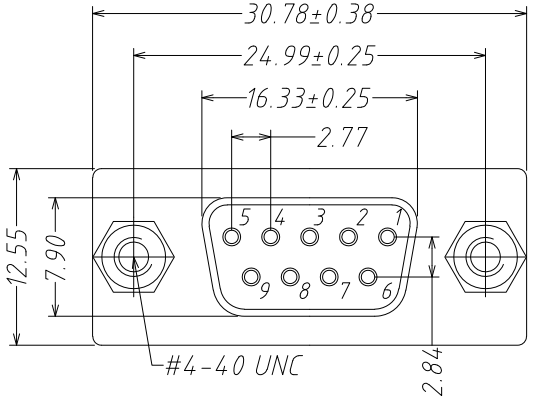

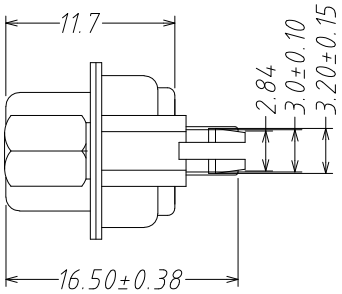

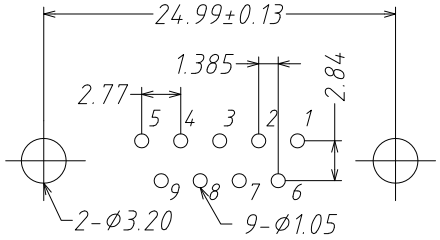

RECOMMENDED PCB LAYOUT

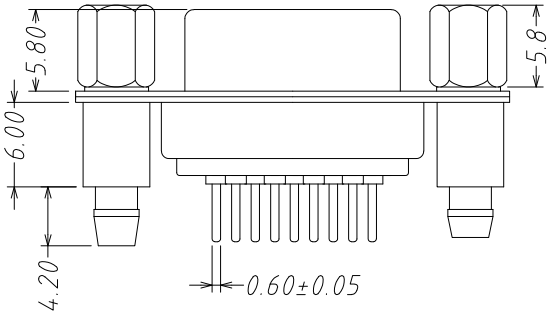

NOTE:
1.MATERIAL SPECIFICATION:
1-1.HOUSING:PBT FIBER 30% (UL94V-0)
1-2.CONTACTS:BRASS.G/F
1-3.SHELL: SPCC.
FRONT SHELL IS NICKEL PLATED
REAR SHELL IS TIN PLATED
1-4.THE SCREW:COPPER ALLOY.NICKEL PLATING
2.ELECTRICAL PERFORMANCE:
2-1.CURRENT RATING:5A
2-2.VOLTAGE RATING:300V AC MIN
2-3.CONTACT RESISTANCE: 30mΩ MAX.
2-4.INSULATION RESISTANCE: 3000MΩ MIN.at 500V DC
2-5.DIELECTRIC WITHSTANDING VOLTAGE: 1000V AC RMS FOR 1MINUTE.
3.ENVIRONMENTAL PERFORMANCE:
OPERATING TEMPERATURE: -55°C~+105°C.

WLDBF0-091 X X 0071

PLATING:
1-G/F
2-AU 3U"
5-AU 15U"
6-AU 30U"

COLOUR:
A:Black
K:White
G:BLUE

REV.	REVISION RECORD	DATE
A0	NEW RELEASE	21.01.13

UNIT: mm
SIZE: A4

GENERAL TOLERANCES	
LINEAR	ANGLES
0.0±0.35	X°REF±6°
0.00±0.25	X°±3°
0.000±0.10	X°X' ±2°

SCALE: 1:1	NAME	DATE
APPROVED	Wang_jr	21.01.13
DESIGNER	Ding_bo	21.01.13
DRAWN	Ou_jian	21.01.13

PART.NO: WLDBF0-091XX0071

DWG.NO: ENDE05

TITLE: DP 9 female needle rivet harpoon lock screw

万连科技 WanLian Teconology Co., Ltd

REV: A0

SHEET: 1/1