The product using material and processing must conform to the "WI-PZ-001"HSF technical standard control requirements

RoHS

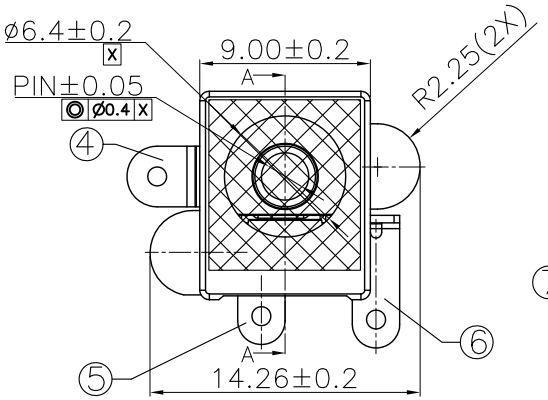

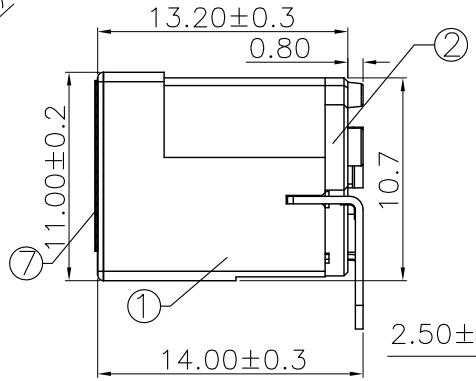

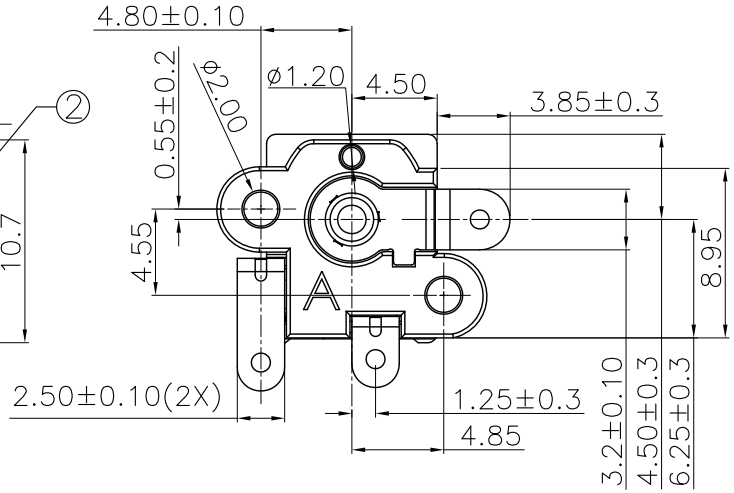

NOTE:
1.MATERIAL SPECIFICATION:
1-1.HOUSING:THERMOPLASTIC
1-2.COVER:HIGH-TEMP
1-3.CENTER PIN:COPPER ALLOY
1-4.TERMINAL 1:COPPER ALLOY
1-5.TERMINAL 2:COPPER ALLOY
1-6.TERMINAL 3:COPPER ALLOY
1-7.Mylar
2.PLATING SPECIFICATION:
2-1.CENTER PIN:
NI PLATING ON CONTACT AREA.
2-2.TERMINAL 4/5/6:
TIN PLATING ON CONTACT AREA.
3.MECHANICAL PERFORMANCE:
3-1.INSERTION AND EXTRACTION FORCE:
3N~30N
3-3.DURABILITY: 5000 CYCLES.
4.ELECTRICAL PERFORMANCE:
4-1.RATED CURRENT:2.5A
4-2.NOMINAL VOLTAGE:20V
4-3.CONTACT RESISTANCE: 30mΩ MAX
AFTER TEST: 100mΩ MAX
4-4.INSULATION RESISTANCE:100MΩ MIN
AFTER TEST: 50MΩ MIN
4-5.WITHSTANDING VOLTAGE: 500V AC
5.OPERATION TEMPERATURE RANGE:-20°C~70°C
PRESERVATIVE TEMPERATURE RANGE:-40°C~85°C
6.P/N

WLDCF0-03 X 1 X X 030

PLATED:
1.G/F
7.SN
8.AG

HOUSING:
1.PA9T BLACK

CIRCUIT DIAGRAM:
1.TYPE A
2.TYPE B

CENTER PIN:
1.ø2.0
2.ø2.35
3.ø2.5

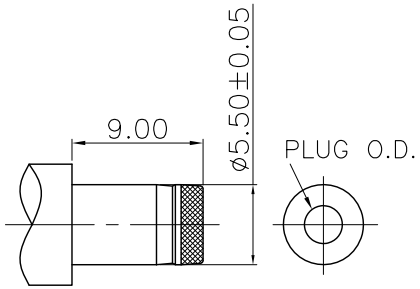

DC MATE PLUG

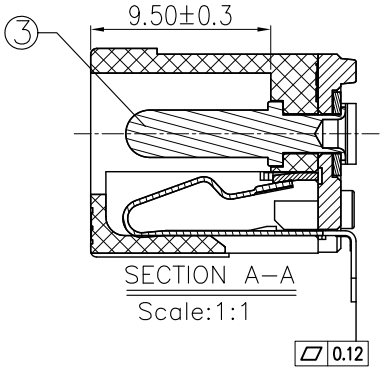

SECTION A-A
Scale:1:1

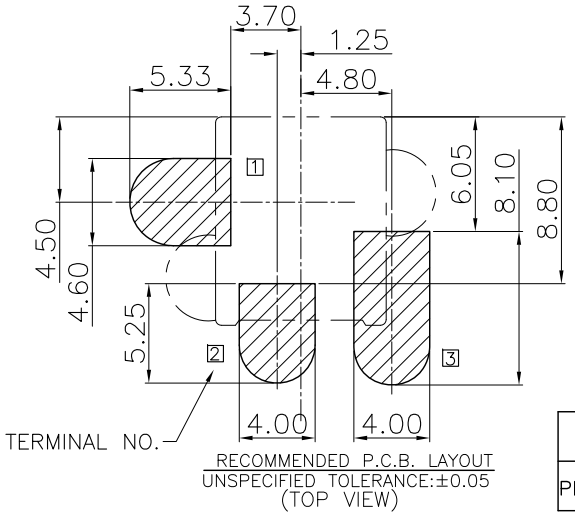

RECOMMENDED P.C.B. LAYOUT
UNSPECIFIED TOLERANCE:±0.05
(TOP VIEW)

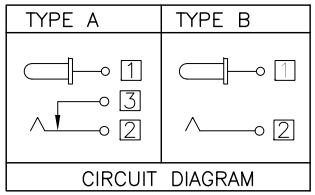

□:TERMINAL NO.

PIN	ø2.0	ø2.35	ø2.5
PLUG O.D.	$ø2.05^{+0.10}_{-0.00}$	$ø2.4^{+0.10}_{-0.00}$	$ø2.55^{+0.10}_{-0.00}$

REV.	REVISION RECORD	DATE
A0	NEW RELEASE	21.01.13

GENERAL TOLERANCES	
LINEAR	ANGLES
0.0±0.35	X°REF±6°
0.00±0.25	X°±3°
0.000±0.10	X°X' ±2°

UNIT: mm
SIZE: A4

SCALE: 1:1	NAME	DATE
APPROVED	Wang_jr	21.01.13
DESIGNER	Han_Gao	21.01.13
DRAWN	Zijun_Huang	21.01.13

PART.NO: WLDCF0-03X1XX030

DWG.NO: ENDE05

TITLE: DC POWER JACK

万连科技
WanLian Teconology Co., Ltd

REV: A0

SHEET: 1/1