The product using material and processing must conform to the "WL-PZ-001"HSF technical standard control requirements

RoHS

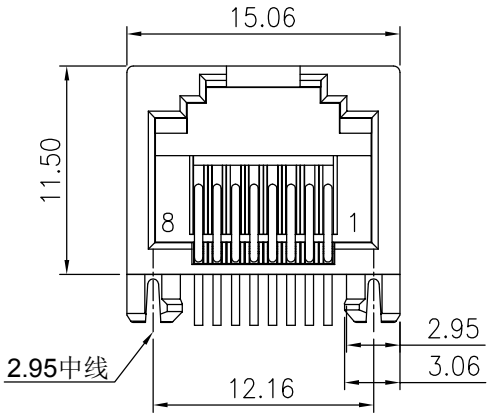

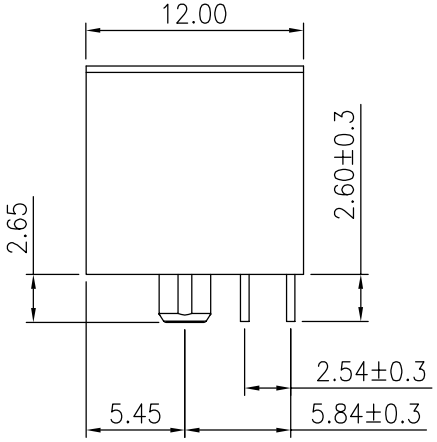

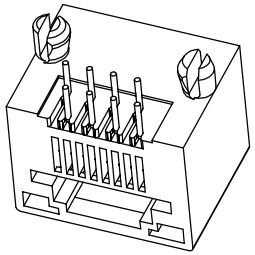

NOTE:
1.MATERIAL SPECIFICATION:
1-1.HOUSING: PBT UL94V-0,BLACK
1-2.CONTACT: PHOSPHOR BRONZE ø0.46mm
2.PLATING SPECIFICATION:
G/F PLATING OVER Ni
3.MECHANICAL PERFORMANCE:
3-1.INSERTION FORCE: 22N MAX
3-2.REMOVAL FORCE: 22N MAX
3-2.DURABILITY: 750 CYCLES MIN.
4.ELECTRICAL PERFORMANCE:
4-1.CURRENT RATING:1.5A
4-2.VOLTAGE RATING:125V MAX
4-3.CONTACT RESISTANCE: 40mΩ Max.
4-4.INSULATION RESISTANCE: 500MΩ MIN
4-5.DIELECTRIC WITHSTANDING VOLTAGE: 500V AC Min
5.ENVIRONMENTAL PERFORMANCE:
OPERATING TEMPERATURE: -40°C~+85°C.
6.PACKAGE SPEC:TRAY

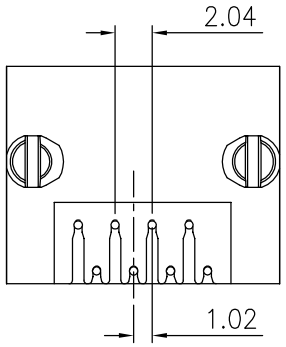

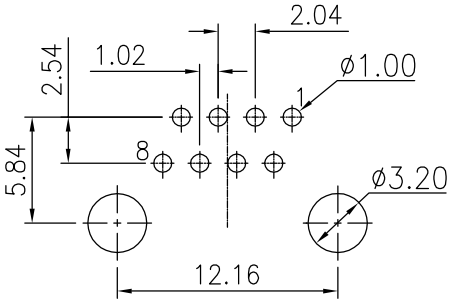

PCBLAYOUT
TOL:±0.05

P/N:
WLR4F9-08 1 X X X 017

PLATING:
1-G/F
2-Au 3u"
3-Au 6u"
5-Au 15u"
6-Au 30u"

HOUSING:
1-PBT
2-LCP
3-PA9T
4-PA46

COLOUR:
A-BLACK
D-ORANGE
E-YELLOW
J-GRAY

REV.	REVISION RECORD	DATE
A0	NEW RELEASE	21.01.13

GENERAL TOLERANCES	
LINEAR	ANGLES
0.0±0.35	X°REF±6°
0.00±0.25	X°±3°
0.000±0.10	X°X' ±2°

UNIT: mm
SIZE: A4

SCALE: 1:1	NAME	DATE
APPROVED	Wang_jr	21.01.13
DESIGNER	Han_Gao	21.01.13
DRAWN	Zijun_Huang	21.01.13

PART.NO: WLR4F9-081XXX017

DWG.NO: ENDE05

TITLE: RJ45 8P8C DIP 1X1

万连科技
WanLian Teconology Co., Ltd

REV: A0
SHEET: 1/1