The product using material and processing must conform to the "WI-PZ-142"HSF technical standard control requirements

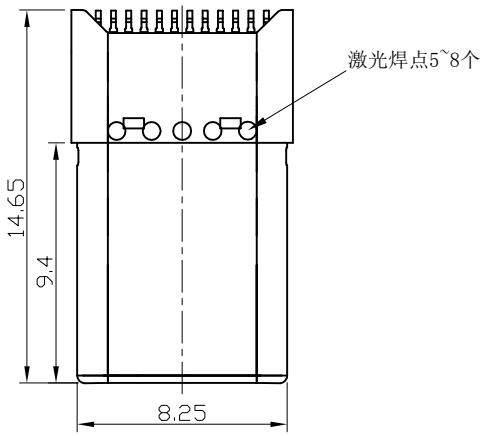

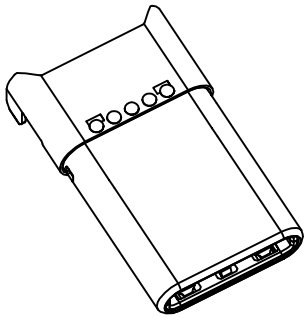

WLT3M0-24 3 X X X 04-085

PLATING:
1-G/F
2-AU 3U"
5-AU 15U"
6-AU 30U"

SHELL:
7-SN
9-NI

COLOUR:
A:Black
K:White
H:Purple
S:NATURE
G:BLUE

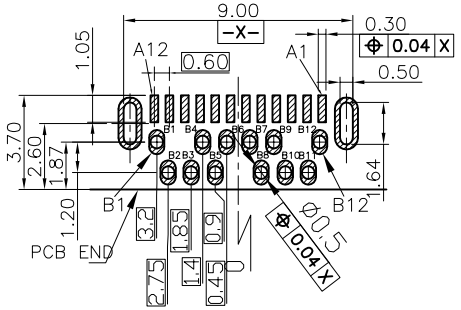

RECOMMEND P.C.B LAYOUT (THICKNESS 0.8mm)
(COMPONENT SIDE) TOLERANCE±0.03mm

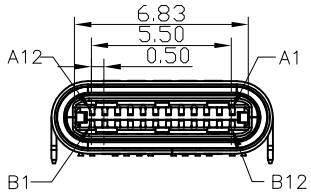

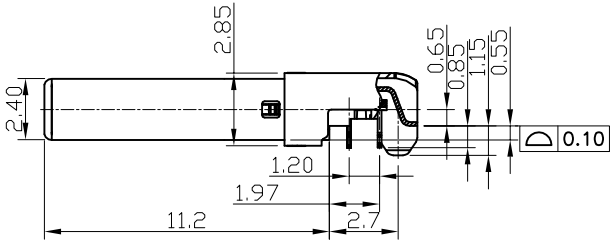

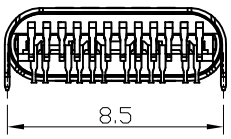

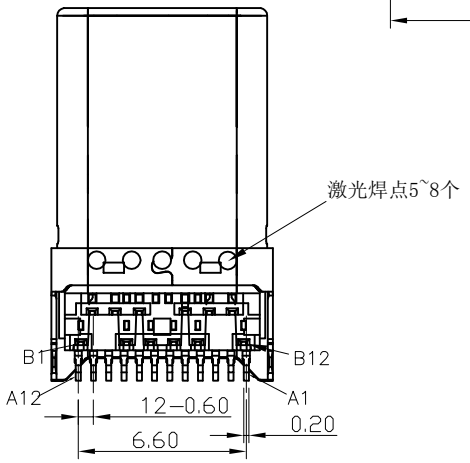

1. Material:
Rubber core :(see description of material number).
IMD Side A & Side B &GND: LCP black.
Contact: Copper ALLOY.
GND: STAINLESS STEEL.
LATCH: STAINLESS STEEL.
FRONT SHELL: STAINLESS STEEL.
REAR SHELL: STAINLESS STEEL.
2. Plating:
Gold plated area (see description of material number), nickel bottom 50U ", solder area 50U "MIN.
Front&Rear Shell: Nickel plated 30U "MIN.

A1	GND	B12	GND
A2	TXp1	B11	RXp1
A3	TXn1	B10	RXn1
A4	VBUS	B9	VBUS
A5	CC1	B8	SBU2
A6	Dp1	B7	
A7	Dn1	B6	
A8	SBU1	B5	VCONN
A9	VBUS	B4	VBUS
A10	RXn2	B3	TXn2
A11	RXp2	B2	TXp2
A12	GND	B1	GND
PIN	SIGNAL NAME	PIN	SIGNAL NAME

REV.	REVISION RECORD	DATE
A0	NEW RELEASE	21.01.13

UNIT: mm
SIZE: A4

GENERAL TOLERANCES	
LINEAR	ANGLES
0.0±0.35	X°REF±6°
0.00±0.25	X°±3°
0.000±0.10	X°X' ±2°

SCALE: 1:1	NAME	DATE
APPROVED	Wang_jr	21.01.13
DESIGNER	Ding_bo	21.01.13
DRAWN	Ou_jian	21.01.13

PART.NO: WLT3M0-243XXX04-085

DWG.NO: ENDE05

TITLE: USB 3.1 TYPE C PLUG CH0.65

万连科技
WanLian Teconology Co., Ltd

REV: A0

SHEET: 1/1