The product using material and processing must conform to the "WI-PZ-001"HSF technical standard control requirements

RoHS

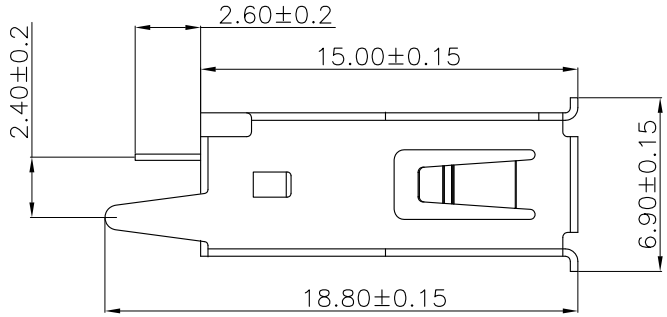

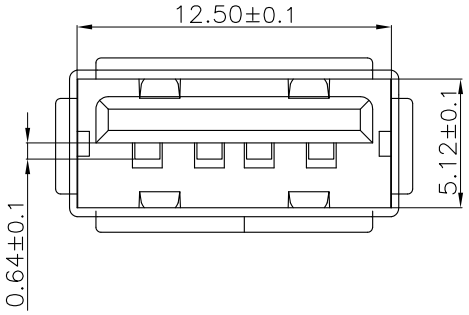

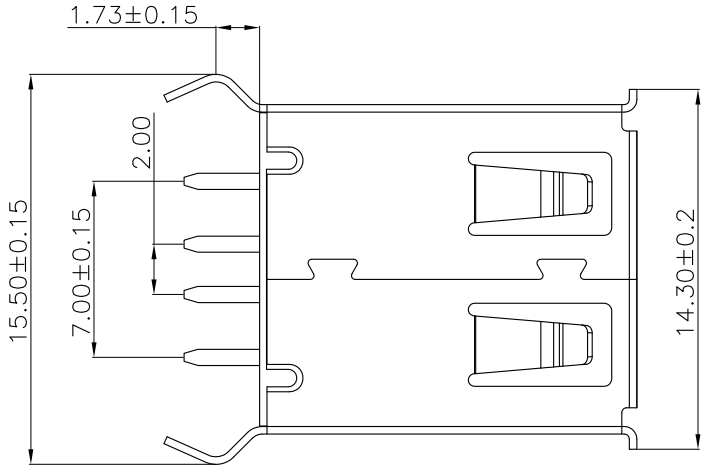

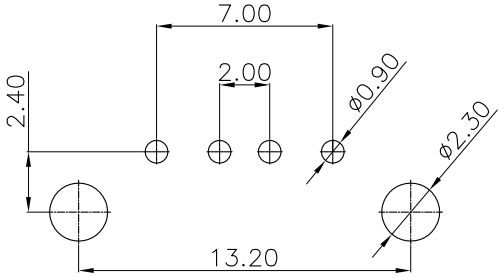

RECOMMENDED P.C.B LAYOUTP.C.B
THICKNESS=1.2mm(TOLERANCE=±0.05)

NOTE:

1.MATERIAL SPECIFICATION:
- 1-1.HOUSING:PBT
- 1-2.CONTACTS:C2680H.
- 1-3.SHELL: SPCC/COPPER ALLOY

2.PLATING SPECIFICATION:
- 2-1.CONTACTS:
  - Ni UNDER PLATED OVER ALL.
  - Sn WELDING AREA PLATED OVER ALL.
  - Au PLATED ON THE FUNCTIONAL AREA OF CONTACT.
- 2-2. SHELL:
  - Cu UNDER PLATED OVER ALL.
  - Ni WELDING AREA PLATED OVER ALL.

3.MECHANICAL PERFORMANCE:
- 3-1.INSERTION FORCE: 3.57kgf MAX
- 3-2.REMOVAL FORCE: 1.02kgf MIN
- 3-3.DURABILITY: 1500 CYCLES.

4.ELECTRICAL PERFORMANCE:
- 4-1.CURRENT RATING:1.5A
- 4-2.VOLTAGE RATING:30V MAX
- 4-3.CONTACT RESISTANCE: 30m Ohm MAX.
- 4-4.INSULATION RESISTANCE: 1000MΩ MIN
- 4-5.DIELECTRIC WITHSTANDING VOLTAGE: 500V AC MIN.

5.ENVIRONMENTAL PERFORMANCE:
- OPERATING TEMPERATURE: -20°C~+85°C.

6.P/N:

WLU2F0-04 1 X X X 148

PLATED:
- 1-G/F
- 2-Au 3u"
- 5-Au 15u"
- 6-Au 30u"

COLOUR:
- A-BLACK
- K-WHITE

SHELL:
- 1-SPCC
- 2-COPPER ALLOY

REV.	REVISION RECORD	DATE
A0	NEW RELEASE	21.01.13

UNIT: mm
SIZE: A4

GENERAL TOLERANCES	
LINEAR	ANGLES
0.0±0.35	X°REF±6°
0.00±0.25	X°±3°
0.000±0.10	X°X' ±2°

SCALE: 1:1	NAME	DATE
APPROVED	Wang_jr	21.08.01
DESIGNER	Han_Gao	21.08.01
DRAWN	Zijun_Huang	21.08.01

PART.NO: WLU2F0-041XXX148

DWG.NO: ENDE05

TITLE: USB2.0 180° 4P/F H=15.00mm

万连科技 WanLian Teconology Co., Ltd

REV: A0 SHEET: 1/1