The product using material and processing must conform to the "WI-PZ-001 "HSF technical standard control requirements

RoHS

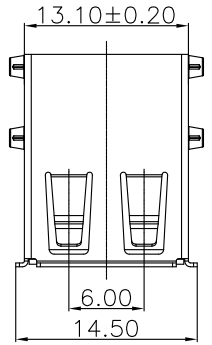

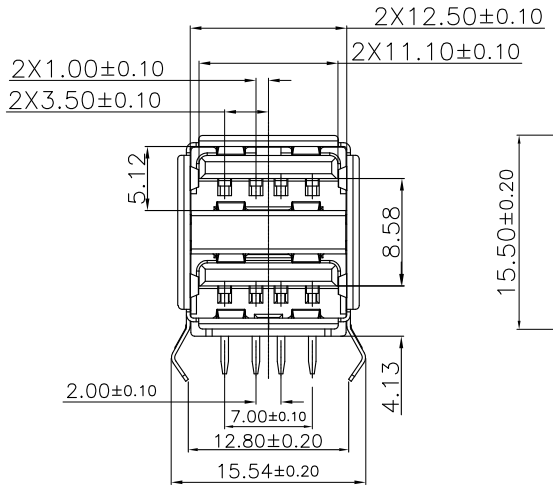

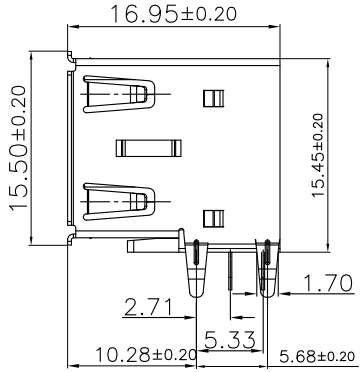

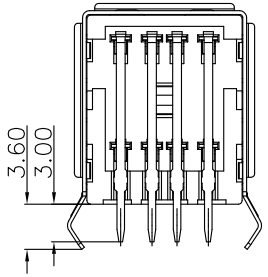

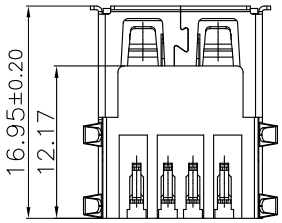

NOTES:

1. MATERIAL AND PLATING:
   - Housing: LCP+30%G.F,UL94V-0,Black
   - Contact: C2680,(See TAB"6")Au And 100u"Sn Plated.
     50u" MIN. NICKEL PLATING ON SOLDER TAILS
   - Shell: Spcc,Over 50u"Ni
2. MECHANICAL CHARACTERISTIC
   - Mating Force: 35N(3.57Kgf) Max.
   - Unmationg Force: 10N(1.02Kgf) Min.
   - Durability: 1,500 Cycles.
3. ELECTRICAL CHARACTERISTIC
   - Current Rating: 1.8A
   - Voltage Rating: 30V AC Max.
   - Contact Resistance: 30m Ohm Max.
   - Insulation Resistance: 1000M Ohm Min.
   - Dielectric Withstanding Voltage: 500V AC.
4. TEMPERATURE
   - Openrating Temperature: -40°C~+85°C
   - Storage Temperature: -60°C~+105°C
5. RECOMMENED PROCESS: WAVE SOLDER 260°C,3~5SECONDS.
6. PACKAGE SPEC:50Pcs/TRAY;1500Pcs/CARTON
7. ORDER INFORMATION:

WLU2F9-08 1 X X 0021

PLATING SPECIFICATION:
- 1—G/F
- 2—AU 3U"
- 3—AU 5U"
- 5—AU 15U"
- 6—AU 30U"

Colour:
- A:Black
- K:White

REV.	REVISION RECORD	DATE
A0	NEW RELEASE	21.01.13

GENERAL TOLERANCES	
LINEAR	ANGLES
0.0±0.25	X° REF±6°
0.00±0.15	X° ±3°
0.000±0.08	X° X'±2°

UNIT: mm

SIZE: A4

SCALE: 1:1	NAME	DATE
APPROVED	Wang_jr	21.01.13
DESIGNER	Wang_jr	21.01.13
DRAWN	Wang_jr	21.01.13

PART.NO: WLU2F9-081XX0021

DWG.NO: ENDE05

TITLE: USB2.0 AF 双层90度插板 无弹无盖

万连科技 WanLian Teconology Co., Ltd

REV: A0

SHEET: 1/1