The product using material and processing must conform to the "WI-PZ-001"HSF technical standard control requirements

RoHS

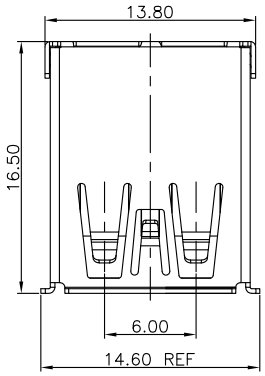

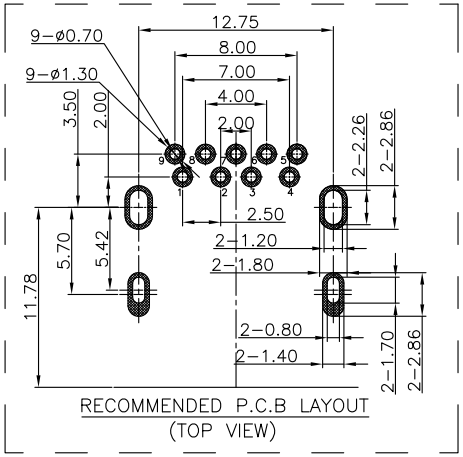

RECOMMENDED P.C.B LAYOUT
(TOP VIEW)

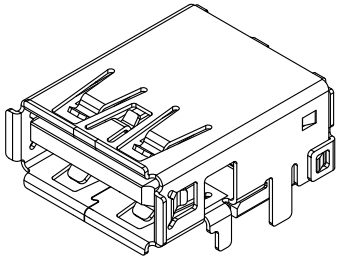

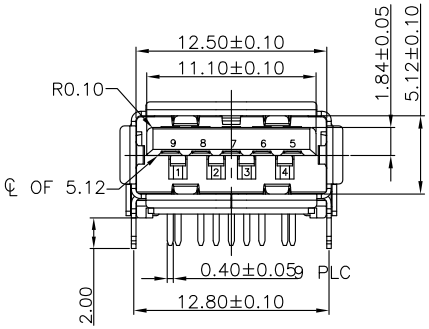

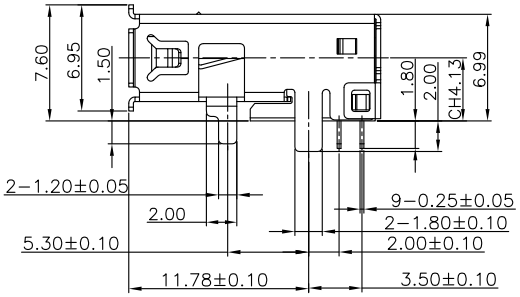

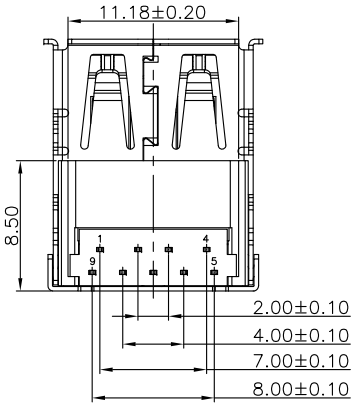

NOTE:
1.MATERIAL SPECIFICATION:
1-1.HOUSING:PA9T,BULE&BLACK,UL94-V0
1-2.COVER:PA9T,BULE&BLACK,UL94-V0
1-3.CONTACT:2.0 CONTACTS C5191
3.0 CONTACTS C2680
1-4.SHELL:SUS304
2.PLATING SPECIFICATION:
2-1.CONTACTS:
AU PLATED ON CONTACT AREA
FOG TIN 100U"MIN PLATED ON SOLDER AREA
NICKEL 80U"MIN UNDERPLATING OVER ALL.
2-2.SHELL:NiCKEL 30U" MIN PLATED.
3.MECHANICAL PERFORMANCE:
3-1.MATING FORCE: 3.5kgf MAX.
3-2.UNMATING FORCE: 0.8kgf MIN.
3-3.DURABILITY: 5000 CYCLES.
4.ELECTRICAL PERFORMANCE:
4-1.CONTACT CURRENT RATING:
1.80 AMPERES FOR VBUS AND GND CONTACTS
0.25 AMPERES FOR ALL OTHER CONTACTS
4-2.VOLTAGE RATING:30 Vac(RMS).
4-3.CONTACT RESISTANCE:
30m Ohm Max FOR VBUS AND GND CONTACTS.
50m Ohm MAX FOR ALL OTHER CONTACTS.
4-4.INSULATION RESISTANCE: 100MΩ MIN
4-5.WITHSTANDING VOLTAGE: AC 100V (r.m.s).
5.TEMPERATURE RANGE:
OPERATING TEMPERATURE: -40°C~+85°C.
6.PACKAGE SPEC:TAPE&REEL

PIN ASSIGNMENT:

Pin No.	1	2	3	4	5	6	7	8	9
Signal Name	VBUS	D-	D+	GND	SSRX-	SSRX+	GND_DRAIN	SSTX-	SSTX+
Remark	USB3.0 Contact pin				USB3.0 Contact pin				

WLU3F9-09 1 X X 0 173

PLATED:
1-G/F
2-Au 3u"
5-Au 15u"
6-Au 30u"

COLOUR:
A-BLACK
G-BLUE

REV.	REVISION RECORD	DATE
A0	NEW RELEASE	21.01.13

UNIT: mm
SIZE: A4

GENERAL TOLERANCES	
LINEAR	ANGLES
0.0±0.35	X°REF±6°
0.00±0.25	X°±3°
0.000±0.10	X°X' ±2°

SCALE: 1:1	NAME	DATE
APPROVED	Wang_jr	21.01.13
DESIGNER	Han_Gao	21.01.13
DRAWN	Zijun_Huang	21.01.13

PART.NO: WLU3F9-091XX0173

DWG.NO: ENDE05

TITLE: USB3.0 AF DIP L=16.50mm

万连科技 WanLian Teconology Co., Ltd

REV: A0

SHEET: 1/1