The product using material and processing must conform to the "WL-PZ-001"HSF technical standard control requirements

RoHS

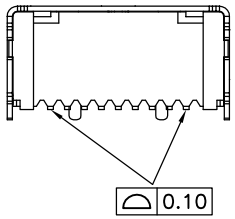

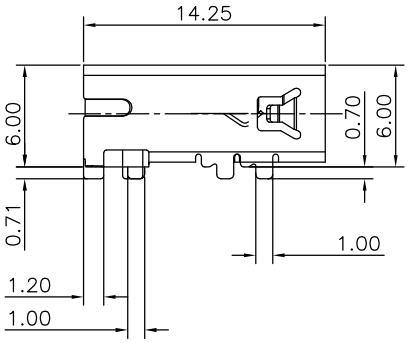

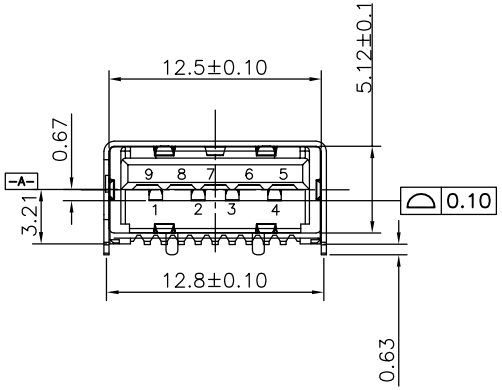

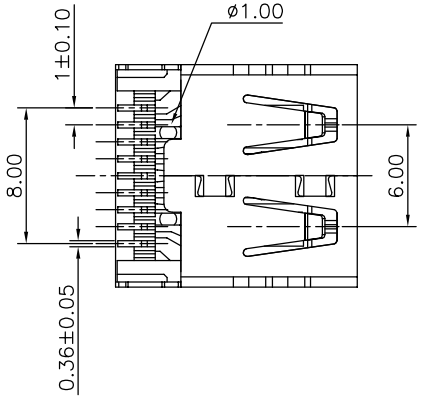

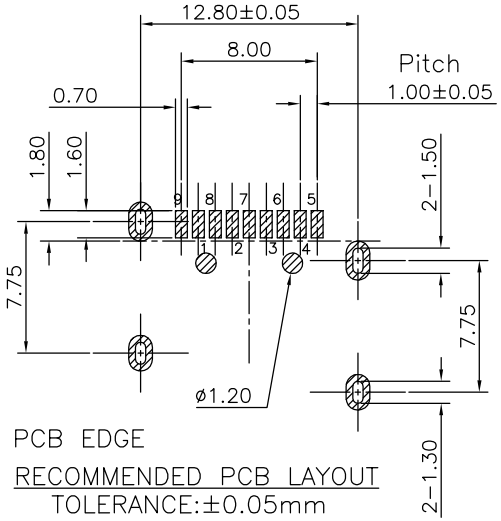

Pin NUMBER	SIGNAL NAME	Pin NUMBER	SIGNAL NAME
1	VBUS	5	StdA_SSRX-
2	D-	6	StdA_SSRX+
3	D+	7	GND_DRAIN
4	GND	8	StdA_SSTX-
		9	StdA_SSTX+
SHELL	SHIELD	SHELL	SHIELD

NOTE:
1.MATERIAL SPECIFICATION:
1-1.HOUSING:LCP BLUE UL94V-0
1-2.CONTACTS:COPPER ALLOY(C2680).
1-3.SHELL:COPPER ALLOY.
2.PLATING SPECIFICATION:
2-1.CONTACTS:
Ni 50u" MIN. UNDER PLATED OVER ALL.
Sn 80u"MIN ON SOLDER AREA
Au PLATED ON THE CONTACTS AREA.
2-2. SHELL:
Ni 80u" MIN. UNDER PLATED OVER ALL.
3.MECHANICAL PERFORMANCE:
3-1.INSERTION FORCE: 3.57kgf MAX
3-2.REMOVAL FORCE: 1.02kgf MIN
3-3.DURABILITY: 5000 CYCLES.
4.ELECTRICAL PERFORMANCE:
4-1.CURRENT RATING:1.5A
4-2.VOLTAGE RATING:30V MAX
4-3.CONTACT RESISTANCE: 30mΩ MAX.
4-4.INSULATION RESISTANCE: 1000MΩ MIN
4-5.DIELECTRIC WITHSTANDING VOLTAGE: 100V AC MIN.
5.ENVIRONMENTAL PERFORMANCE:
OPERATING TEMPERATURE: -40°C~+85°C.
6.PACKAGE SPEC: TRAY
7.P/N ORDER:
WLU3F9-09 2 X X X 115

PLATING:
1-G/F
2-Au 3u"
5-Au 15u"
6-Au 30u"

HOUSING COLOUR:
A-BLACK
G-BLUE

SHELL:
1-SPCC
2-COPPER ALLOY

REV.	REVISION RECORD	DATE
A0	NEW RELEASE	21.01.13

UNIT: mm
SIZE: A4

GENERAL TOLERANCES	
LINEAR	ANGLES
0.0±0.35	X°REF±6°
0.00±0.25	X°±3°
0.000±0.10	X°X' ±2°

SCALE: 1:1	NAME	DATE
APPROVED	Wang_jr	21.01.13
DESIGNER	Ding_bo	21.01.13
DRAWN	Ou_jian	21.01.13

PART.NO: WLU3F9-092XXX115

DWG.NO: ENDE05

TITLE: USB3.0 A TYPE 9P/F SMT H=0.7mm

万连科技
WanLian Teconology Co., Ltd

REV: A0 SHEET: 1/1