The product using material and processing must conform to the "WL-PZ-001"HSF technical standard control requirements

| | 2pin | 3pin | 4pin | 5pin | 6pin | 8pin |
|---|---|---|---|---|---|---|
| 图形 | 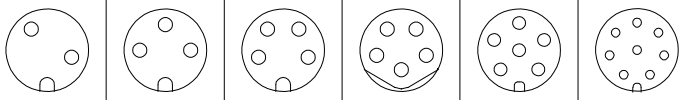 | | | | | |
| CODE | A-code | A-code | A-code | B-code | A-code | A-code |

RoHS

Recommended Panel Cut-out

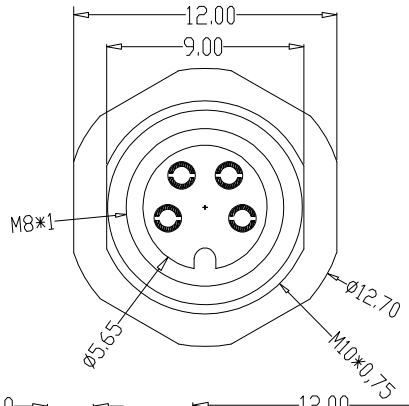


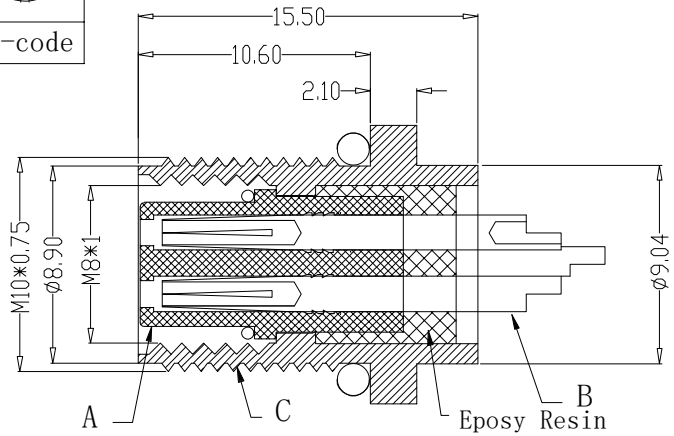


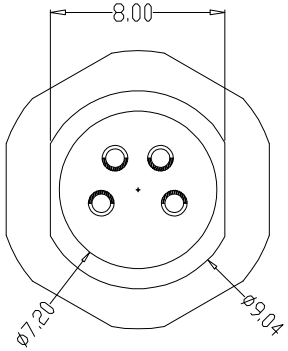


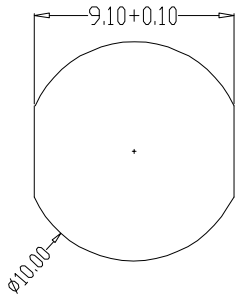


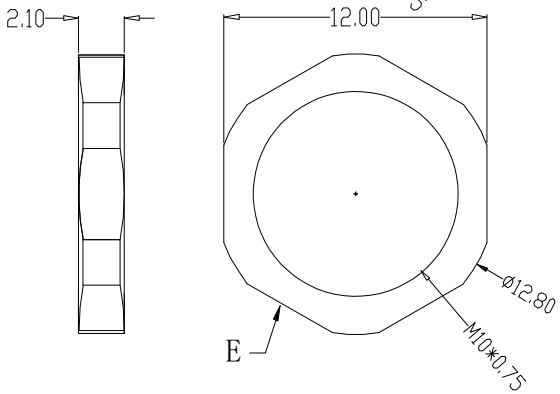


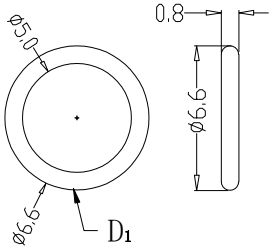


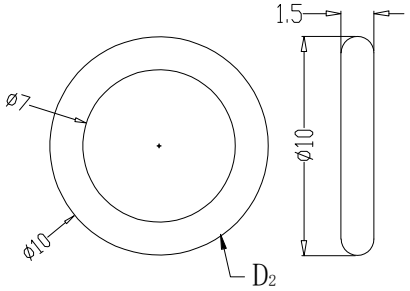


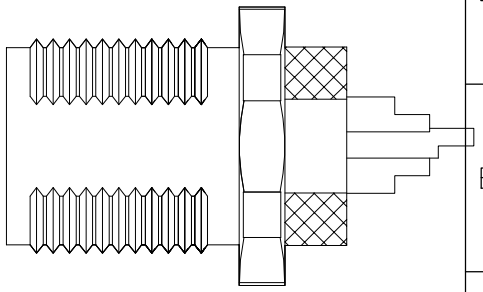

组合图

| P/N | TITLE |
|---|---|
| M08A02-04-027 | M8防水 A-CODE 2P线端母座 前锁面板式M10 SW12T-15.5L |
| M08A03-04-027 | M8防水 A-CODE 3P线端母座 前锁面板式M10 SW12T-15.5L |
| M08A04-04-027 | M8防水 A-CODE 4P线端母座 前锁面板式M10 SW12T-15.5L |
| M08B05-04-027 | M8防水 B-CODE 5P线端母座 前锁面板式M10 SW12T-15.5L |
| M08A06-04-027 | M8防水 A-CODE 6P线端母座 前锁面板式M10 SW12T-15.5L |
| M08A08-04-027 | M8防水 A-CODE 8P线端母座 前锁面板式M10 SW12T-15.5L |

| | | | |
|---|---|---|---|
| Engagemenr firce | ≤50N | Rated volage | 2-5pin:60v DC<br>6-8PIN:30V DC |
| Disengagement force | ≥5N | Rated current | 2-5pin:4A<br>6-8PIN:2A |
| Mechanical lifespan | ≥500 | Insulation resisrance | ≥1000MΩ |
| IP rating | IP67/IP68 | Conract resistangce | ≤10MΩ |
| Flammability | UL94 V-0 | Operation Temperature | -40° C~105° C |

| | PARTS | MARERIALS | TREATMENT | AMOUNT |
|---|---|---|---|---|
| A | HOUSING | PA66+GF | SPECIFY COLOR | 1 |
| B | CONTACT | BRASS | GOLD PLATED | 2~8 |
| C | SHIELD | BRASS | NICKL PLATED | 1 |
| D | O-RING | EPDM | BLACK | 2 |
| E | NUT | BRASS | NICKL PLATED | 1 |

| REV. | REVISION RECORD | DATE |
|---|---|---|
| A0 | NEW RELEASE | 21.11.17 |

UNIT: mm

SIZE: A4

| GENERAL TOLERANCES | |
|---|---|
| LINEAR | ANGLES |
| 0.0±0.35 | X°REF±6° |
| 0.00±0.25 | X°±3° |
| 0.000±0.10 | X°X' ±2° |

| SCALE: 1:1 | NAME | DATE |
|---|---|---|
| APPROVED | | |
| DESIGNER | | |
| DRAWN | | |

PART.NO: M08XXX-04-027

DWG.NO: ENDE05

TITLE: M8防水 2~8P 线端母座 前锁面板式M10 SW12T-15.5L

万连科技 WanLian Technology Co., Ltd

REV: A0

SHEET: 1/1