The product using material and processing must conform to the "WL-PZ-001"HSF technical standard control requirements

	2pin	3pin	4pin	5pin	6pin	8pin
图形	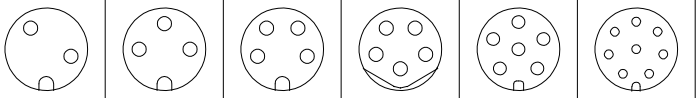					
CODE	A-code	A-code	A-code	B-code	A-code	A-code

RoHS

Recommended Panel Cut-out

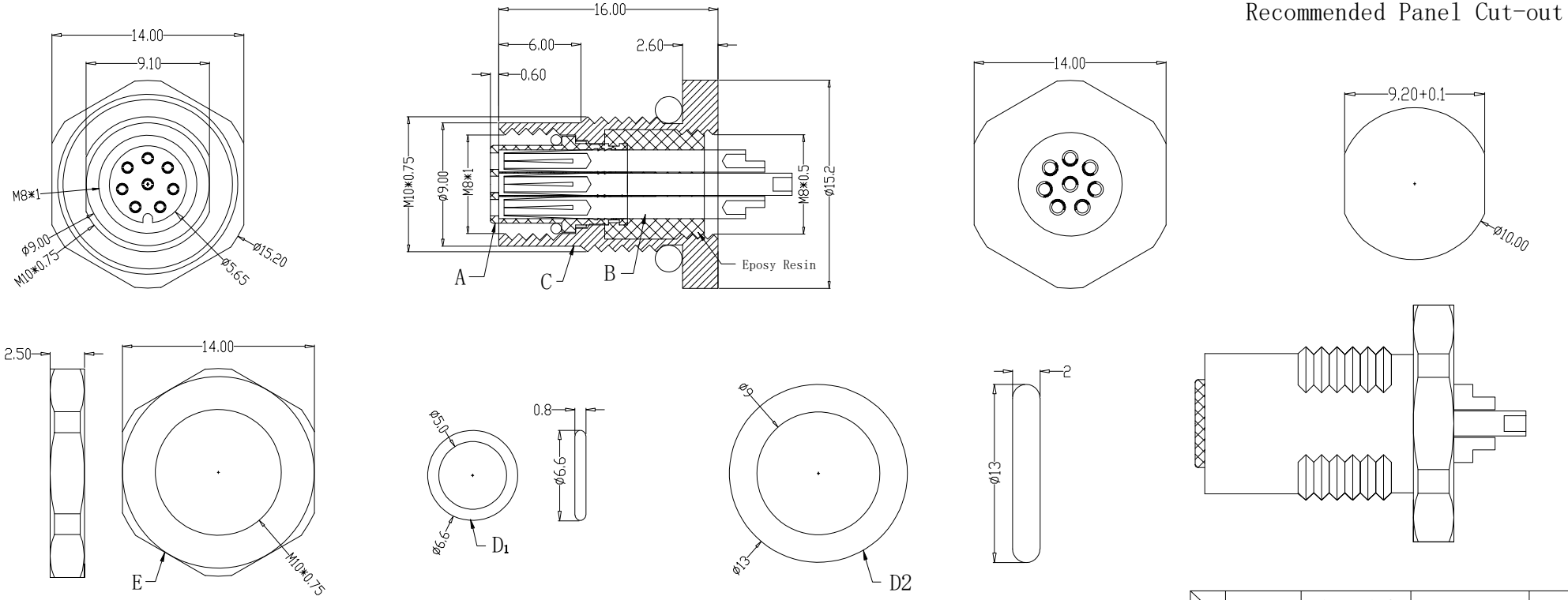

P/N	TITLE
M08A02-04-029	M8防水 A-CODE 2P 线端母座 前锁面板式M10 SW14T-16L
M08A03-04-029	M8防水 A-CODE 3P 线端母座 前锁面板式M10 SW14T-16L
M08A04-04-029	M8防水 A-CODE 4P 线端母座 前锁面板式M10 SW14T-16L
M08B05-04-029	M8防水 B-CODE 5P 线端母座 前锁面板式M10 SW14T-16L
M08A06-04-029	M8防水 A-CODE 6P 线端母座 前锁面板式M10 SW14T-16L
M08A08-04-029	M8防水 A-CODE 8P 线端母座 前锁面板式M10 SW14T-16L

Engagemenr firce	≤50N	Rated volage	2-5pin:60v DC 6-8PIN:30V DC
Disengagement force	≥5N	Rated current	2-5pin:4A 6-8PIN:2A
Mechanical lifespan	≥500	Insulation resisrance	≥1000MΩ
IP rating	IP67/IP68	Conract resistangce	≤10MΩ
Flammability	UL94 V-0	Operation Temperature	-40° C~105° C

	PARTS	MARERIALS	TREATMENT	AMOUNT
A	HOUSING	PA66+GF	SPECIFY COLOR	1
B	CONTACT	BRASS	GOLD PLATED	2~8
C	OUTER CONTACT	BRASS	NICKL PLATED	1
D	O-RING	EPDM	BLACK	2
E	NUT	BRASS	NICKL PLATED	1

REV.	REVISION RECORD	DATE
A0	NEW RELEASE	21.11.17

UNIT: mm

SIZE: A4

GENERAL TOLERANCES	
LINEAR	ANGLES
0.0±0.35	X°REF±6°
0.00±0.25	X°±3°
0.000±0.10	X°X' ±2°

SCALE: 1:1	NAME	DATE
APPROVED		
DESIGNER		
DRAWN		

PART.NO: M08XXX-04-029

DWG.NO: ENDE05

TITLE: M8防水 2~8P 线端母座 前锁面板式M10 SW14T-16L

万连科技 WanLian Technology Co., Ltd

REV: A0

SHEET: 1/1