The product using material and processing must conform to the "WL-PZ-001"HSF technical standard control requirements

RoHS

图形																		
规格	2PIN	2PIN	2PIN 4改2	3PIN	3PIN	3PIN 4改3	4PIN 2+2	4PIN	5PIN	5PIN 正方形2+3	5PIN 180°	5PIN 260° 2+3	5PIN 360°	6PIN 360°	6PIN 258°	6PIN 8改6	7PIN	8PIN
X值	1.20	1.50	1.00	1.20	1.50	1.00	1.20+1.00	1.00	1.00	1.50+1.00	0.80	1.50+1.00	1.00	1.00	0.80	0.80	0.80	0.80

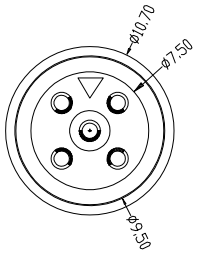

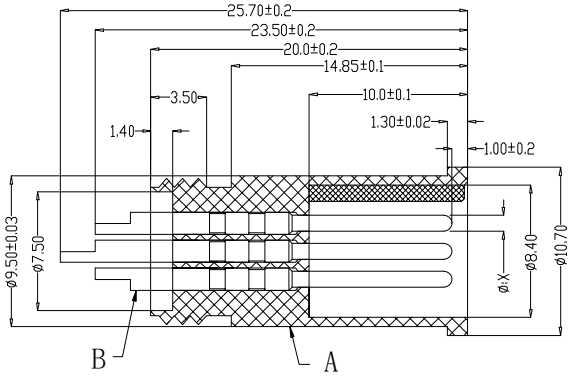

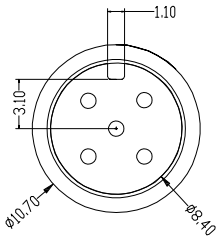

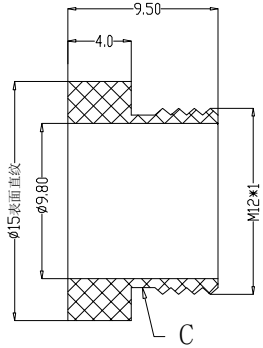

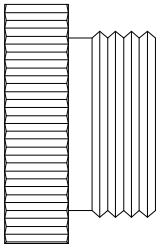

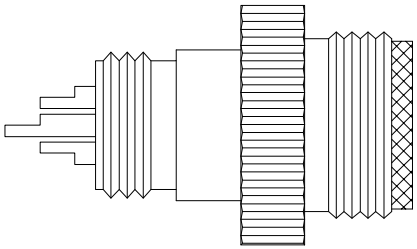

组合图

P/N	TITLE
M12A05-07-106	M12防水 A-CODE 5P线端公头 B款9.5L塑胶螺丝 360度 1.0*5

Engagemenr firce	≤50N	Rated volage	2-5pin:60v 6-8pin:30v
Disengagement force	≥5N	Rated current	2-5pin:4A 6-8pin:2A
Mechanical lifespan	≥500	Insulation resisrance	≥1000MΩ
IP rating	IP67/IP68	Conract resistangce	≤10MΩ
Flammability	UL94 V-0	Operation Temperature	-40° C~105° C

	PARTS	MARERIALS	TREATMENT	AMOUNT
A	HOUSING	PA66+GF	SPECIFY COLOR	1
B	CONTACT	BRASS	GOLD PLATED	5
C	NUT	ALALLOY	BLACK/SILVER	1
D				
E				

REV.	REVISION RECORD	DATE
A0	NEW RELEASE	

UNIT: mm

SIZE: A4

GENERAL TOLERANCES	
LINEAR	ANGLES
0.0±0.35	X°REF±6°
0.00±0.25	X°±3°
0.000±0.10	X°X' ±2°

SCALE: 1:1	NAME	DATE
APPROVED		
DESIGNER		
DRAWN		

PART.NO: M12A05-07-106

DWG.NO: ENDE05

TITLE: M12防水 A-CODE 5P线端公头 B款9.5L塑胶螺丝 360度 1.0*5

万连科技 WanLian Technology Co., Ltd

REV: A0

SHEET: 1/1