The product using material and processing must conform to the "WL-PZ-001"HSF technical standard control requirements

RoHS

PCB开孔尺寸

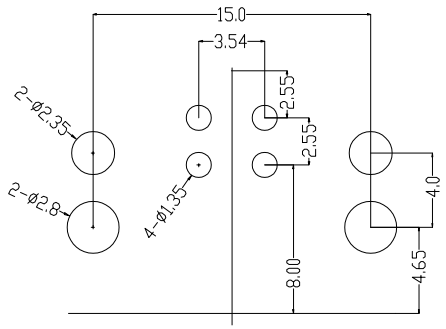

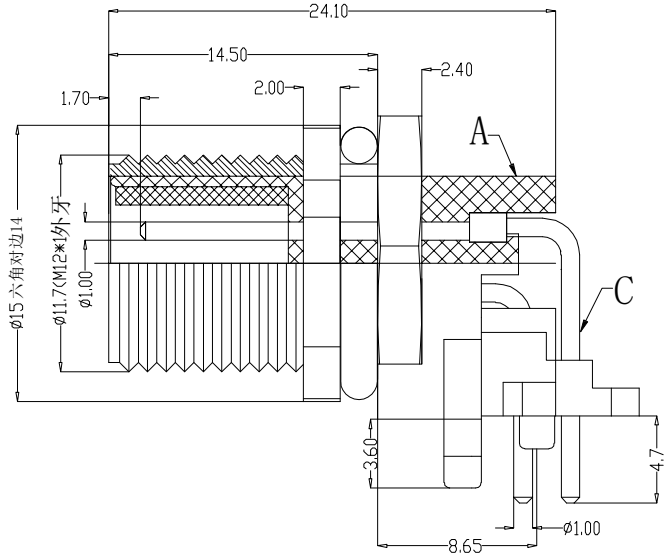

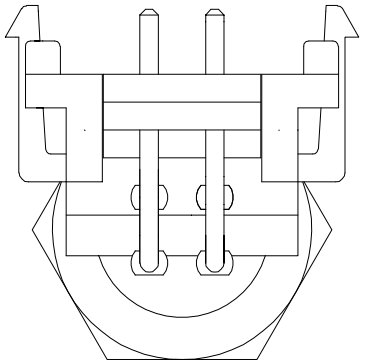

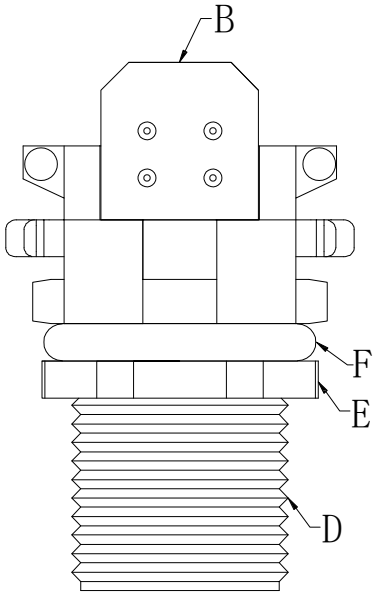

面板开孔尺寸

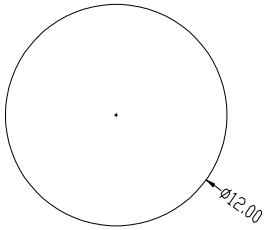

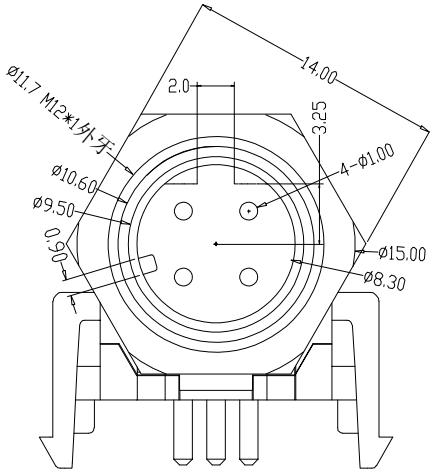

组合图

Engagemenr firce	≤50N	Rated volage	60v DC	
Disengagement force	≥5N	Rated current	4A	
Mechanical lifespan	≥3000	Insulation resisrance	≥1000MΩ	
IP rating	IP67	Conract resistangce	≤20MΩ	
Flammability	UL94 V-0	Operation Temperature		
simple and clear	1.0~3.8KG	Cycle Life	2000 times	

项目	零件	零件材质	处理	数量
A	绝缘体	PA66胶料	注塑要求颜色	1
B	定位胶塞	PA66胶料	注塑要求颜色	1
C	PIN针	H59黄铜	镀金	4
D	五金外壳	H65黄铜	镀镍	1
E	薄螺母	H59黄铜	镀镍	1
F	防水圈	硅胶	红色/黑色	1

P/N	TITLE
M12D04-03-137	M12防水 4P公头 D-CODE 板端弯头

REV.	REVISION RECORD	DATE
A0	NEW RELEASE	21.11.17

UNIT: mm

SIZE: A4

GENERAL TOLERANCES	
LINEAR	ANGLES
0.0±0.35	X°REF±6°
0.00±0.25	X°±3°
0.000±0.10	X°X' ±2°

SCALE: 1:1	NAME	DATE
APPROVED		
DESIGNER		
DRAWN		

PART.NO: M12D04-03-137

DWG.NO: ENDE05

TITLE: M12防水 4P公头 D-CODE 板端弯头

万连科技 WanLian Technology Co., Ltd

REV: A0

SHEET: 1/1