The product using material and processing must conform to the "WI-PZ-001"HSF technical standard control requirements

pin位	2pin	3pin	4pin	5pin	6pin	7pin	8pin
X 值	1.00	1.00	1.00	1.00	0.80	0.80	0.80
A-CODE 图 形	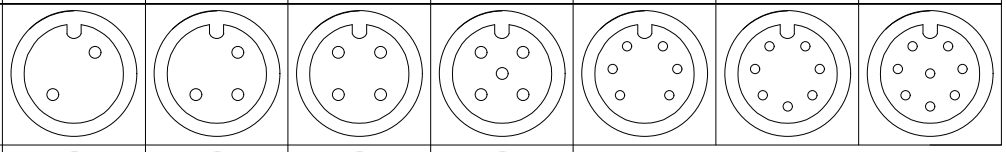						
B-CODE 图 形	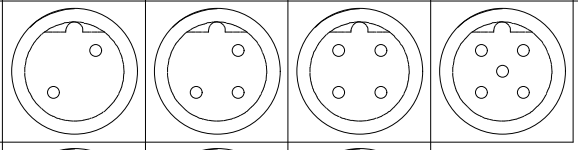						
D-CODE 图 形	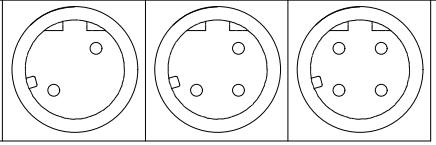						

Recommended Panel Cut-out

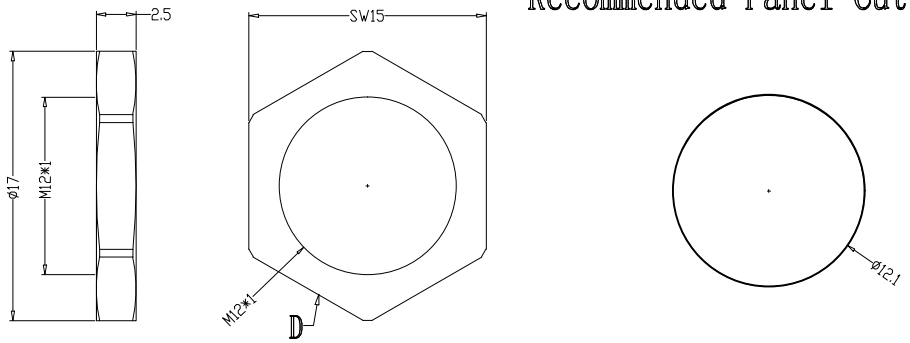

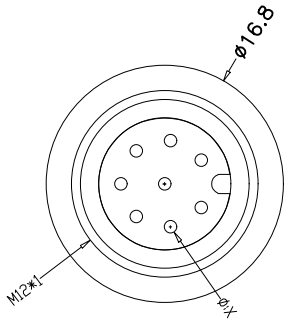

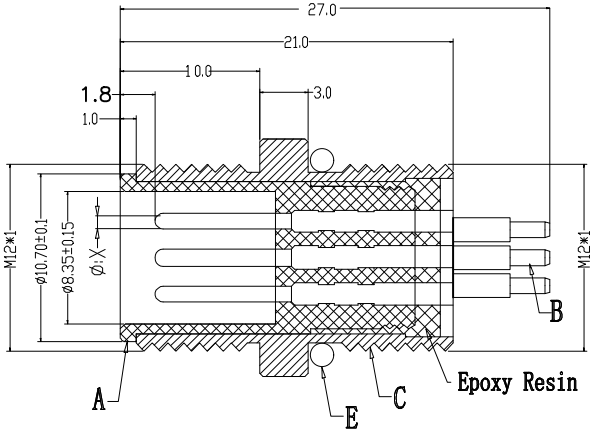

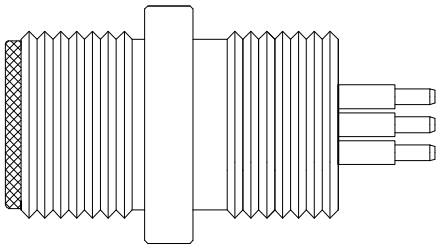

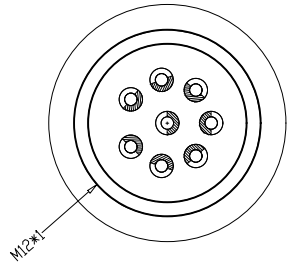

Engagement force	≤50N	Rated volage	2-5pin:60V 6-8pin:30V
Disengagement force	≥5N	Rated current	2-5pin:4A 6-8pin:2A
Mechanical lifespan	≥500	Insulation resistance	≥1000MΩ
IP rating	IP67	Contact resistance	≤10mΩ
Flammability	UL94 V-0	Operation Temperature	-40° C~105° C

	PARTS	MATERIALS	TREATMENT	AMOUNT
A	HOUSING	PA66+GF	SPECIFY COLOR	1
B	CONTACT	BRASS	GOLD PLATED	2~8
C	OUTER CONTACT	BRASS	NICKL PLATED	1
D	NUT	BRASS	NICKL PLATED	1
E	O-RING	EPDM	SPECIFY COLOR	1
F				

REV.	REVISION RECORD	DATE
A0	NEW RELEASE	

GENERAL TOLERANCES

LINEAR	ANGLES
0.0±0.35	X°REF±6°
0.00±0.25	X°±3°
0.000±0.10	X°X' ±2°

UNIT: mm

SIZE: A4

SCALE: 1:1

	NAME	DATE
APPROVED		
DESIGNER		
DRAWN		

PART.NO: M12XXX-03-304-M12

DWG.NO: ENDE05

TITLE: M12后锁面板 公直头(圆盘)
ABD编码 PCB式 开孔M12

WanLian Technology Co., Ltd

REV: A0

SHEET: 1/1