The product using material and processing must conform to the "WL-PZ-001"HSF technical standard control requirements

RoHS

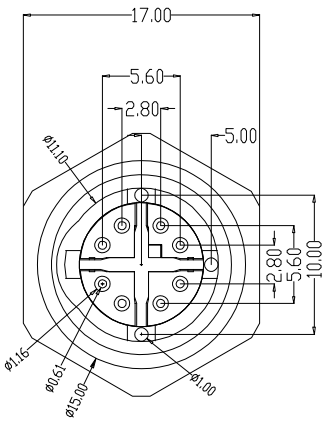

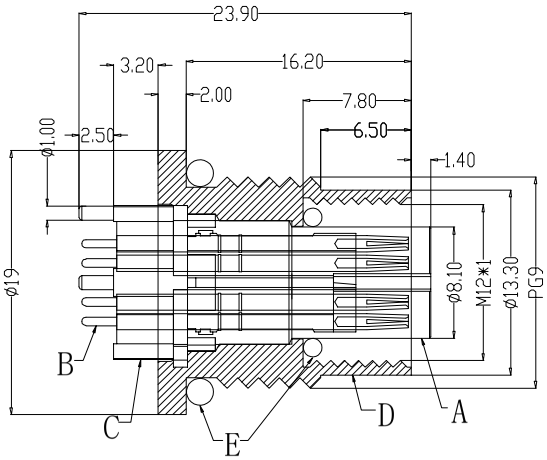

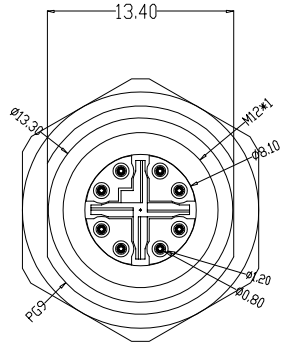

Recommended Panel Cut-out

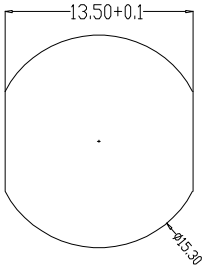

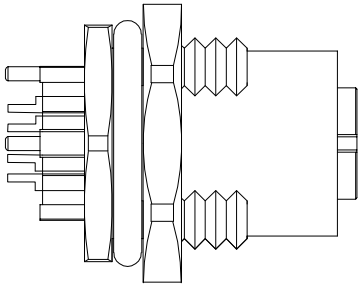

组合图

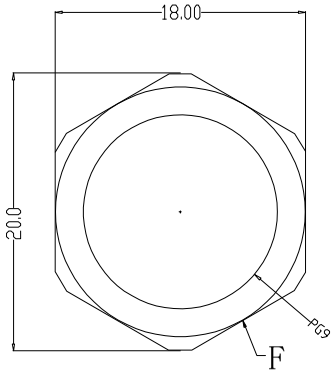

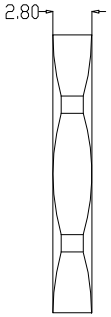

P/N	TITLE
M12X08-04-110	M12防水 8P板端母座 X-CODE 前锁面板式 PG9 SW17T

Engagemenr firce	≤50N	Rated volage	48v
Disengagement force	≥10N	Rated current	0.5A
Mechanical lifespan	≥500	Insulation resisrance	≥1000MΩ
IP rating	IP67/IP68	Conract resistangce	≤10MΩ
Flammability	UL94 V-0	Operation Temperature	-40° C~105° C

	PARTS	MARERIALS	TREATMENT	AMOUNT
A	HOUSING	PA66+GF	SPECIFY COLOR	1
B	CONTACT	BRASS	GOLD PLATED	8
C	OUTETCONTACT	AINC ALLOY	NICKL PLATED	1
D	NUT	AINC ALLOY	NICKL PLATED	1
E	O-RING	BRASS	NICKL PLATED	1
F				

REV.	REVISION RECORD	DATE
A0	NEW RELEASE	21.11.17

UNIT: mm

SIZE: A4

GENERAL TOLERANCES	
LINEAR	ANGLES
0.0±0.35	X°REF±6°
0.00±0.25	X°±3°
0.000±0.10	X°X' ±2°

SCALE: 1:1	NAME	DATE
APPROVED		
DESIGNER		
DRAWN		

PART.NO: M12XXX-04-110

DWG.NO: ENDE05

万连科技 WanLian Technology Co., Ltd

TITLE: M12防水 8P板端母座 X-CODE 前锁面板式PG9 SW17T

REV: A0

SHEET: 1/1