The product using material and processing must conform to the "WI-PZ-001"HSF technical standard control requirements

PIN位	2PIN	3PIN4改3	4PIN	5PIN正方形	6PIN	7PIN	8PIN
A-CODE 图 形							
B-CODE 图 形							
D-CODE 图 形							

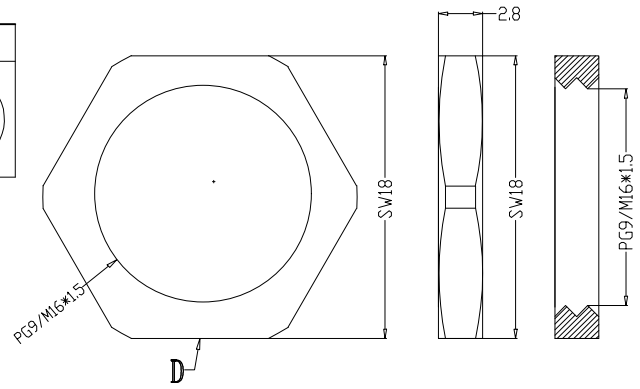

Recommended Panel Cut-out

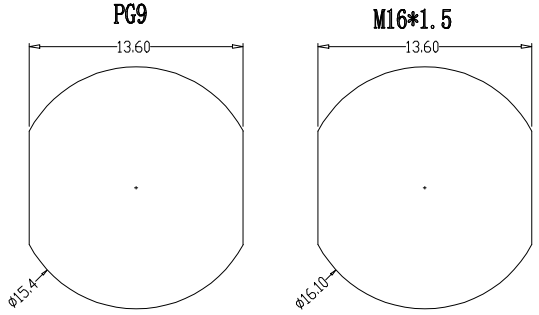

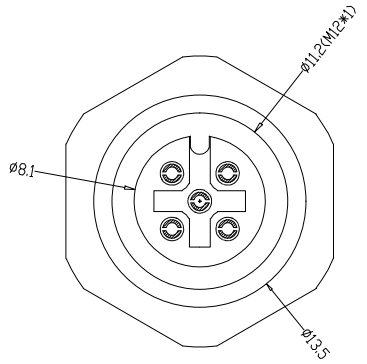

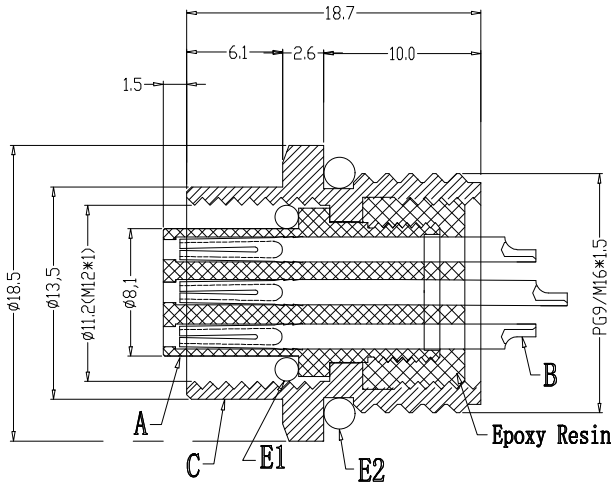

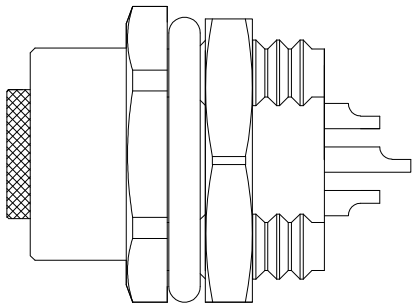

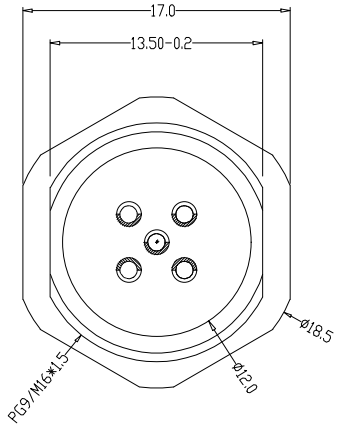

Engagement force	≤50N	Rated volage	2-5pin:60V 6-8pin:30V
Disengagement force	≥5N	Rated current	2-5pin:4A 6-8pin:2A
Mechanical lifespan	≥500	Insulation resistance	≥1000M Ω
IP rating	IP67	Contact resistance	≤10m Ω
Flammability	UL94 V-0	Operation Temperature	-40° C~105° C

	PARTS	MATERIALS	TREATMENT	AMOUNT
A	HOUSING	PA66+GF	SPECIFY COLOR	1
B	CONTACT	BRONZE	GOLD PLATED	2~8
C	OUTER CONTACT	BRASS	NICKL PLATED	1
D	NUT	BRASS	NICKL PLATED	1
E	O-RING	EPDM	SPECIFY COLOR	2
F				

REV.	REVISION RECORD	DATE
A0	NEW RELEASE	

UNIT: mm
SIZE: A4

GENERAL TOLERANCES	
LINEAR	ANGLES
0.0±0.35	X°REF±6°
0.00±0.25	X°±3°
0.000±0.10	X°X' ±2°

SCALE: 1:1	NAME	DATE
APPROVED		
DESIGNER		
DRAWN		

PART.NO: M12XXX-04-303-M16

DWG.NO: ENDE05

TITLE: M12后锁面板 母直头 ABD编码 焊线式 开孔M16

万连科技 WanLian Technology Co., Ltd

REV: A0 SHEET: 1/1