The product using material and processing must conform to the "WI-PZ-001"HSF technical standard control requirements

RoHS+HF

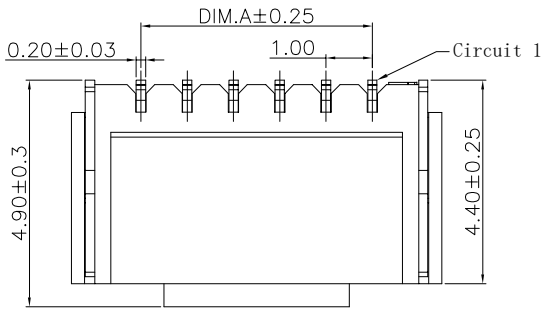

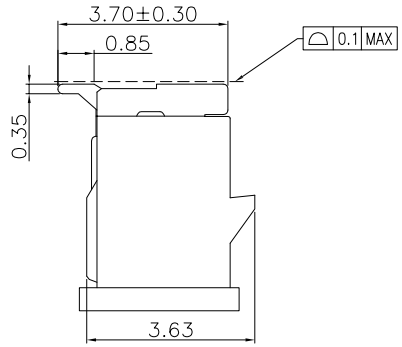

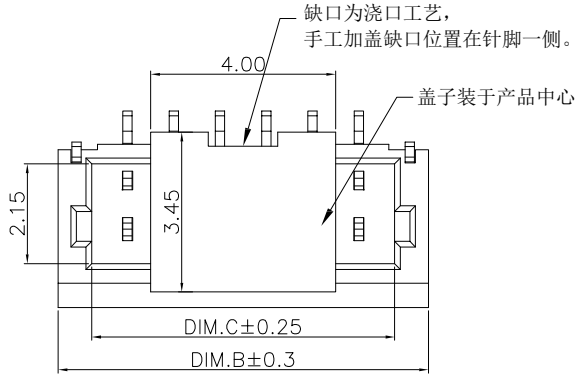

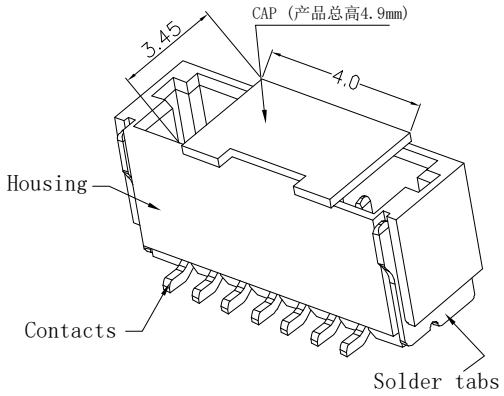

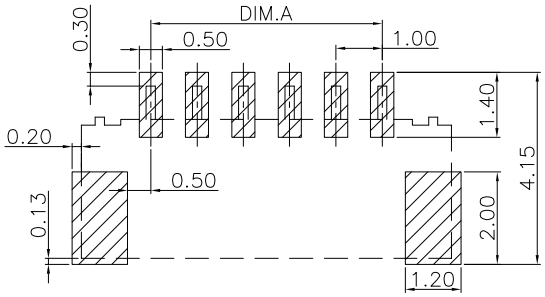

Recommend PCB Layout

NOTE:
1.MATERIAL SPECIFICATION:
1-1.CONTACT: PHOSPHOR BRONZE
1-2.GROUND LUG: PHOSPHOR BRONZE
1-3.HOUSING: LCP UL94V-0
1-4.CAP: LCP UL94V-0
2.PLATING SPECIFICATION:
2-1.CONTACTS:
BRIGHT TIN PLATED OVER ALL.
2-2.GROUND LUG:
BRIGHT TIN PLATED OVER ALL.
3.MECHANICAL PERFORMANCE:
3-1.RETENTIVITY FORCE: 0.5KGF/pin min
3-2.DURABILITY: 50 CYCLES.
4.ELECTRICAL PERFORMANCE:
4-1.CURRENT RATING: 1.0A
RATED VOLTAGE : 50V AC/DC
4-2.CONTACT RESISTANCE: 20 mΩ MAX
4-3.INSULATION RESISTANCE: 100MΩ Min
4-4.DIELECTRIC WITHSTANDING : 500V
5.ENVIRONMENTAL PERFORMANCE:
5-1.OPERATING TEMPERATURE: -25°C~+85°C.
6.PACKAGE SPEC:REEL/1500pcs
7.P/N:

A2

A1002 W 0 1-1 XX 2 X X 1

SERIES NO:
CONNECTOR: W-WAFER
ANGLE: 0-180°
TYPE: 1-TYPE 1
ROW NO: 1-SINGLE ROW
PIN Q'PY: 02~20
TERMIPOINT: 2-SMT
PLATING: A-ALL AU G/F, C-BRIGHE TIN, D-MATTE Tin
COLOR: A-BLACK, S-NATURE

Poles	Dimensions (mm) A	B	C	Poles	Dimensions (mm) A	B	C
02	1.00	4.00	2.45	12	11.00	14.00	12.45
03	2.00	5.00	3.45	13	12.00	15.00	13.45
04	3.00	6.00	4.45	14	13.00	16.00	14.45
05	4.00	7.00	5.45	15	14.00	17.00	15.45
06	5.00	8.00	6.45	16	15.00	18.00	16.45
07	6.00	9.00	7.45	17	16.00	19.00	17.45
08	7.00	10.00	8.45	18	17.00	20.00	18.45
09	8.00	11.00	9.45	19	18.00	21.00	19.45
10	9.00	12.00	10.45	20	19.00	22.00	20.45
11	10.00	13.00	11.45				

REV.	REVISION RECORD	DATE
A0	NEW RELEASE	21.11.17
A1	盖子增加缺口	22.10.20
A2	PART NUMBER RENEWAL	23.09.08

UNIT: mm
SIZE: A4

GENERAL TOLERANCES	
LINEAR	ANGLES
0.0±0.35	X°REF±6°
0.00±0.25	X°±3°
0.000±0.10	X°X' ±2°

SCALE: 1:1	NAME	DATE
APPROVED	Wang_jr	22.10.20
DESIGNER	H_Gao	22.10.20
DRAWN	LX_HOU	22.10.20

PART.NO: A1002W01-1XX2XX1

DWG.NO: ENDE05

TITLE: Pitch 1.00mm 180° SH 单排立贴带锁扣 Wafer 吸取盖方向一致

万连科技 WanLian Technology Co., Ltd

REV: A2

SHEET: 1/2

The product using material and processing must conform to the "WI-PZ-001"HSF technical standard control requirements

RoHS+HF

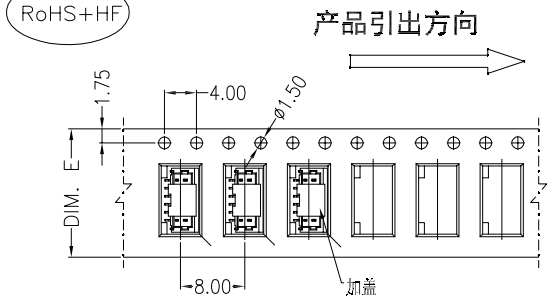

02~14 CONTACTS

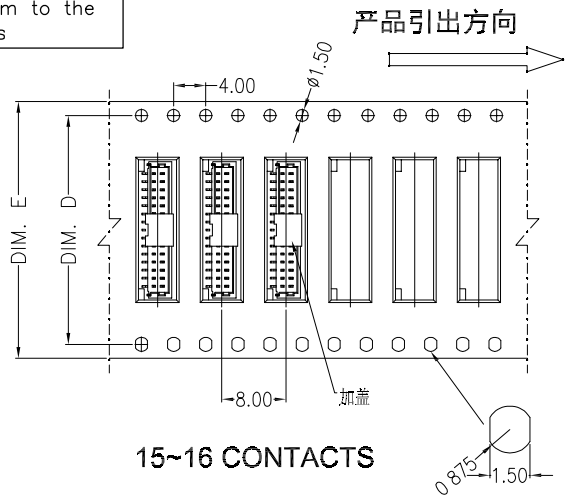

15~16 CONTACTS

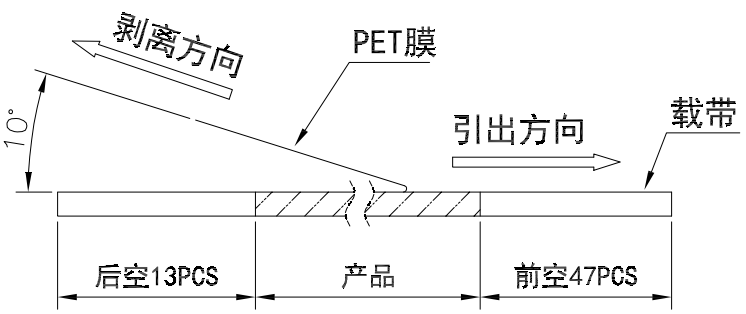

(PET膜剥离示意图)

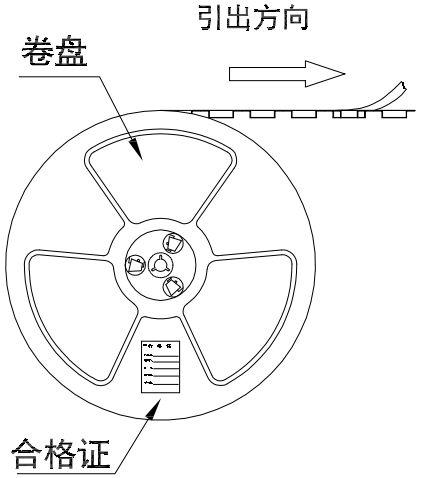

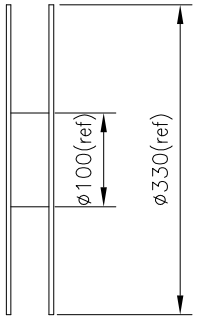

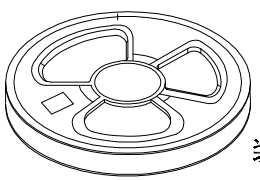

装*盘(参考列表一)

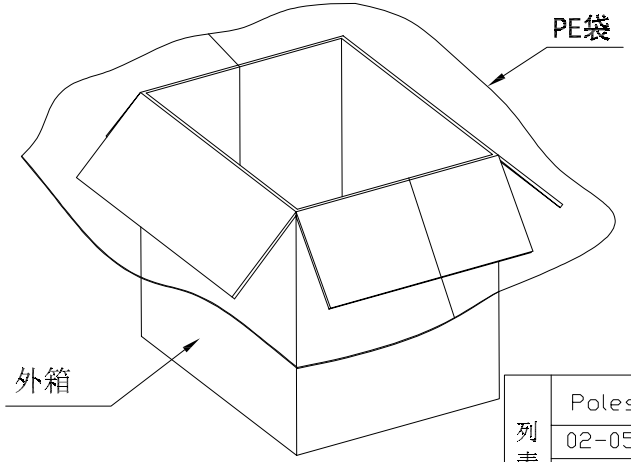

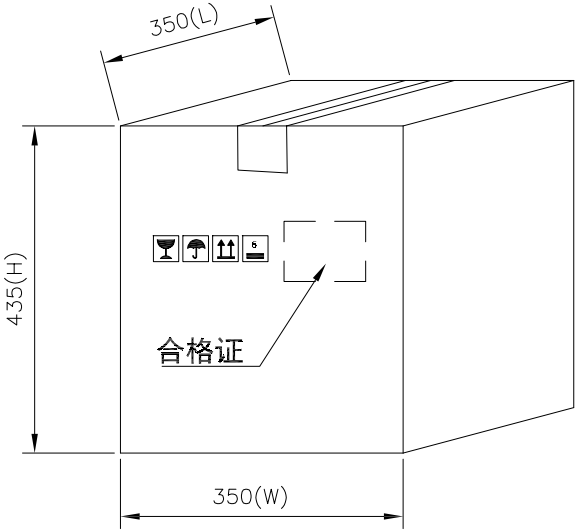

包装说明:

1. 把成品包入卷盘中，每盘装1500PCS，卷盘上贴上合格证，将装好产品的卷盘放进外箱中，外箱内先套一个大PE袋，外箱上贴贴上合格证.
2. 所有材料有害物控制需符合RoHS标准。

	Poles	DIM.D	DIM.E	PETwidth	Q'ty/reel	Packing (Reel/Caton)
列表一	02-05	-	16	12.8	1500PCS	20/Reel
	06-14	-	24	20.7	1500PCS	15/Reel
	15-16	28.4	32	25.5	1500PCS	11/Reel

REV.	REVISION RECORD	DATE
A0	NEW RELEASE	21.11.17
A1	盖子增加缺口	22.10.20
A2	PART NUMBER RENEWAL	23.09.08

UNIT: mm

SIZE: A4

GENERAL TOLERANCES	
LINEAR	ANGLES
0.0±0.35	X°REF±6°
0.00±0.25	X°±3°
0.000±0.10	X°X' ±2°

SCALE: 1:1	NAME	DATE
APPROVED	Wang_jr	22.10.20
DESIGNER	H_Gao	22.10.20
DRAWN	LX_HOU	22.10.20

PART.NO: A1002W01-1XX2XX1

DWG.NO: ENDE05

万连科技 WanLian Technology Co., Ltd

TITLE: Pitch 1.00mm 180°SH 单排立贴带锁扣 Wafer 吸取盖方向一致

REV: A2

SHEET: 2/2