The product using material and processing must conform to the "WI-PZ-001"HSF technical standard control requirements

RoHS

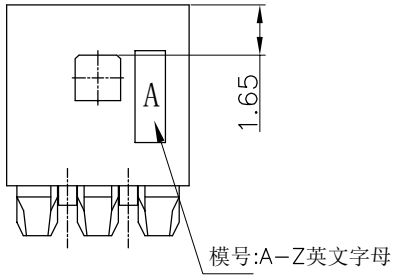

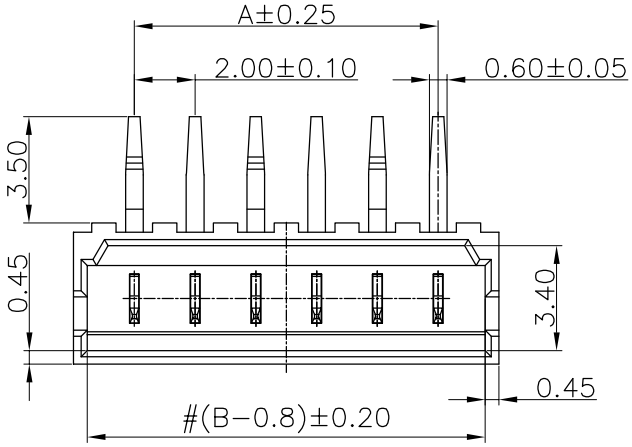

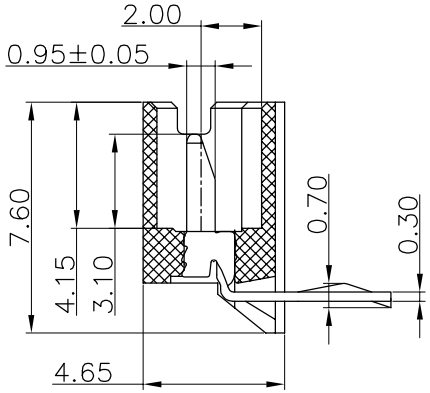

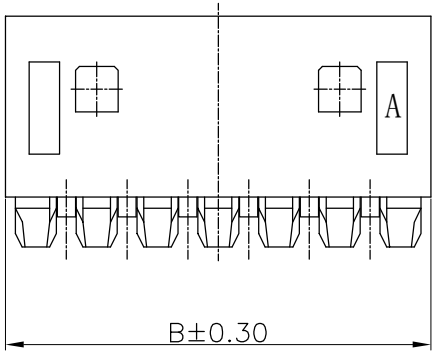

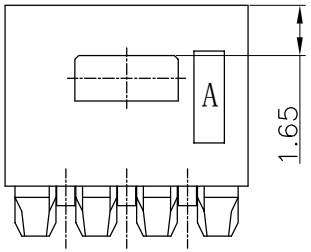

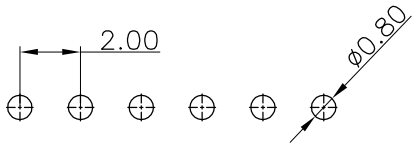

Recommended P.C.B Layout
General Tolerance±0.05

NOTE:
1.MATERIAL SPECIFICATION:
1-1.HOUSING: PA66 UL94-V0
1-2.CONTACT: PHOSPHOR BRONZE
2.PLATING SPECIFICATION:
2-1.CONTACTS:
TIN/GOLD FLASH PLATED OVER ALL.
3.MECHANICAL PERFORMANCE:
3-1.RETENTIVITY FORCE: 1.0KGF/pin min
3-2.DURABILITY: 50 CYCLES.
4.ELECTRICAL PERFORMANCE:
4-1.CURRENT RATING: 2A
RATED VOLTAGE : 125V AC/DC
4-2.CONTACT RESISTANCE: 20 mΩ MAX
4-3.INSULATION RESISTANCE: 1000MΩ Min
4-4.DIELECTRIC WITHSTANDING : 800V
5.ENVIRONMENTAL PERFORMANCE:
5-1.OPERATING TEMPERATURE: -25°C~+85°C.
6.PACKAGE SPEC: TUBE
7.P/N:

A1 A2004 W 9-1 XX 1 X X 0

SERIES NO:
CONNECTOR: W-WAFER
ANGLE: 9-90°
ROW NO: 1-SINGLE ROW
PIN Q'PY: 02~15
COLOR: A-BLACK S-NATURE
PLATING: A-ALL AU G/F C-BRIGHT TIN D-MATTE Tin
TERMIPOINT: 1-DIP

Ordering Information & Dimensions

Circuit	Dimensions(mm)		Circuit	Dimensions(mm)	
	A	B		A	B
02	2.00	6.00	09	16.00	20.00
03	4.00	8.00	10	18.00	22.00
04	6.00	10.00	11	20.00	24.00
05	8.00	12.00	12	22.00	26.00
06	10.00	14.00	13	24.00	28.00
07	12.00	16.00	14	26.00	30.00
08	14.00	18.00	15	28.00	32.00

REV.	REVISION RECORD	DATE
A0	NEW RELEASE	21.11.17
A1	PART NUMBER RENEWAL	23.09.26

GENERAL TOLERANCES	
LINEAR	ANGLES
0.0±0.35	X°REF±6°
0.00±0.25	X°±3°
0.000±0.10	X°X' ±2°

UNIT: mm
SIZE: A4

SCALE: 1:1	NAME	DATE
APPROVED	Wang_jr	23.09.26
DESIGNER	H_Gao	23.09.26
DRAWN	LC_Liu	23.09.26

PART.NO: A2004W9-1XX1XX0

DWG.NO: ENDE05

TITLE: Pitch2.00mm 90°MX 单排卧插打外K Wafer

万连科技 WanLian Technology Co., Ltd

REV: A1 SHEET: 1/1