The product using material and processing must conform to the "WI-PZ-001"HSF technical standard control requirements

RoHS

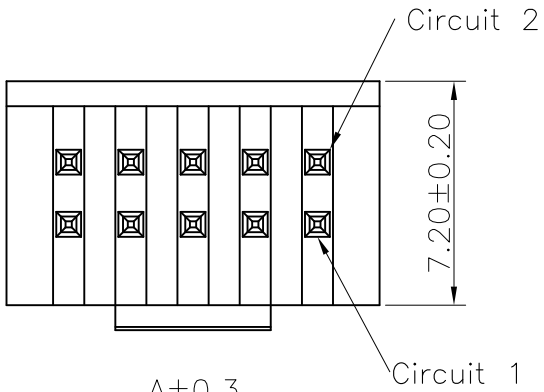

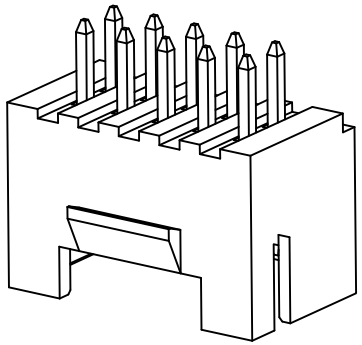

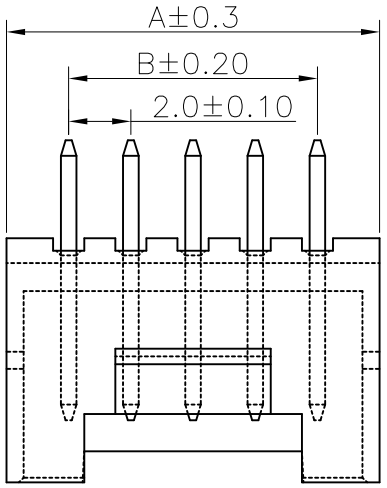

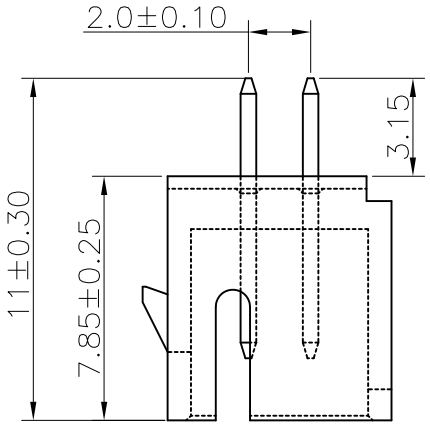

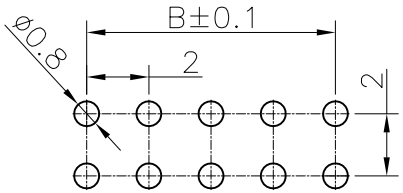

PCB Layout

NOTE:
1.MATERIAL SPECIFICATION:
1-1.HOUSING: PA46
1-2.CONTACTS: BRASS
2.PLATING SPECIFICATION:
2-1.CONTACTS:
SN PLATED OVER ALL.
3.MECHANICAL PERFORMANCE:
3-1.RETENTIVITY FORCE: 1.0KGF/PIN MIN
3-2.DURABILITY: 50 CYCLES.
4.ELECTRICAL PERFORMANCE:
4-1.CURRENT RATING: 3.0A
4-2.VOLTAGE RATING: 250V MAX
4-3.CONTACT RESISTANCE: 30mΩ Max.
4-4.INSULATION RESISTANCE: 1000MΩ MIN
4-5.DIELECTRIC WITHSTANDING VOLTAGE: 1000V AC Min
5.ENVIRONMENTAL PERFORMANCE:
OPERATING TEMPERATURE: -25°C~+85°C.
6.PACKAGE SPEC:PE BAG
7.P/N ORDER:

A1 A2009 W 0-2 XX 1 X X 0

SERIES NO:
CONNECTOR:
W-WAFER
ANGLE:
0-180°
ROW NO:
2-DOUBLE ROW
PIN Q'PY:
04~40
COLOR:
A-BLACK
K-WHITE
S-NATURE
PLATING:
A-ALL AU G/F
C-BRIGHT TIN
D-MATTE TIN
TERMIPOINT:
1-DIP

Circuit	Dimensions(mm)		Circuit	Dimensions(mm)	
	A	B		A	B
2*02	6.00	---	2*12	26.00	22.00
2*03	8.00	4.00	2*13	28.00	24.00
2*04	10.00	6.00	2*14	30.00	26.00
2*05	12.00	8.00	2*15	32.00	28.00
2*06	14.00	10.00	2*16	34.00	30.00
2*07	16.00	12.00	2*17	36.00	32.00
2*08	18.00	14.00	2*18	38.00	34.00
2*09	20.00	16.00	2*19	40.00	36.00
2*10	22.00	18.00	2*20	42.00	38.00
2*11	24.00	20.00			

REV.	REVISION RECORD	DATE
A0	NEW RELEASE	21.01.13
A1	PART NUMBER RENEWAL	23.9.12

UNIT: mm
SIZE: A4

GENERAL TOLERANCES	
LINEAR	ANGLES
0.0±0.35	X°REF±6°
0.00±0.25	X°±3°
0.000±0.10	X°X' ±2°

SCALE: 1:1	NAME	DATE
APPROVED	Wang_jr	23.9.12
DESIGNER	Han_Gao	23.9.12
DRAWN	Zijun_Huang	23.9.12

PART.NO: A2009W0-2XX1XX0

DWG.NO: ENDE05

万连科技 WanLian Technology Co., Ltd

TITLE: PITCH 2.0MM 180°PHB double row WAFER

REV: A1

SHEET: 1/1