The product using material and processing must conform to the "WI-PZ-001"HSF technical standard control requirements

RoHS

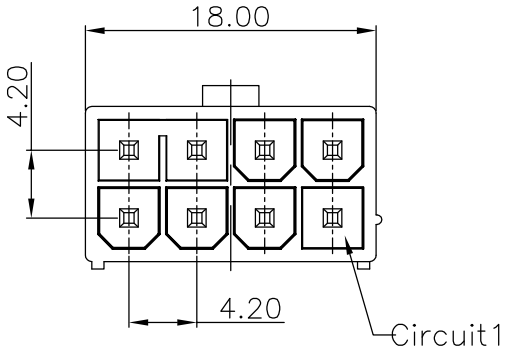

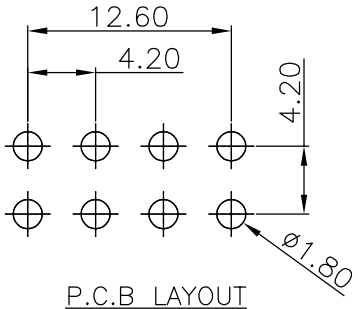

P.C.B LAYOUT

NOTE:
1.MATERIAL SPECIFICATION:
1-1.HOUSING: PA66
1-2.CONTACTS: BRASS
2.PLATING SPECIFICATION:
2-1.CONTACTS:
TIN/GOLD FLASH PLATED OVER ALL.
3.ELECTRICAL PERFORMANCE:
3-1.CURRENT RATING: 9A AC/DC
3-2.CONTACT RESISTANCE: 10 mΩ MAX
3-3.INSULATION RESISTANCE: 1000MΩ Min
3-4.DIELECTRIC WITHSTANDING : 1500V
4.ENVIRONMENTAL PERFORMANCE:
4-1.OPERATING TEMPERATURE: -25°C~+85°C.
5.PACKAGE SPEC: PE BAG
6.P/N:

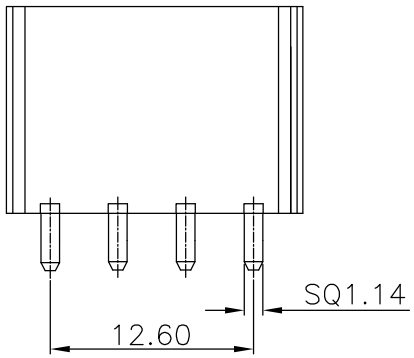

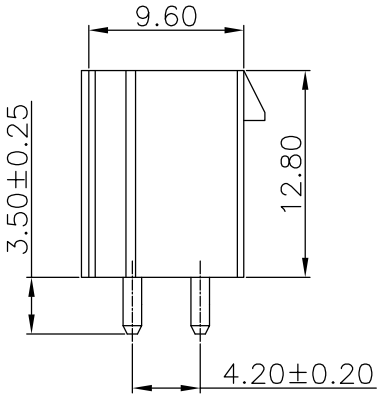

A1 C4201 W 0 2-2 XX 1 X X X

SERIES NO:

CONNECTOR:
W-WAFER

ANGLE:
0-180°

TYPE:
2-TYPE 2

ROW NO:
2-DOUBLE ROW

PIN Q'PY:
16

HOUSING:
0-UL94V-0
2-UL94V-2

COLOR:
A-BLACK
S-NATURE

PLATING:
C-BRIGHT TIN

TERMIPOINT:
1-DIP

REV.	REVISION RECORD	DATE
A0	NEW RELEASE	21.11.17
A1	PART NUMBER RENEWAL	23.09.11

UNIT: mm
SIZE: A4

GENERAL TOLERANCES	
LINEAR	ANGLES
0.0±0.35	X°REF±6°
0.00±0.25	X°±3°
0.000±0.10	X°X' ±2°

SCALE: 1:1	NAME	DATE
APPROVED	Wang_jr	23.09.11
DESIGNER	Han_Gao	23.09.11
DRAWN	LX_HOU	23.09.11

PART.NO: C4201W02-2XX1XXX

DWG.NO: ENDE05

TITLE: Pitch 4.2mm 双排 180° DIP Wafer 实心针 连PIN 特殊款

万连科技 WanLian Technology Co., Ltd

REV: A1 SHEET: 1/1